YAMAHA

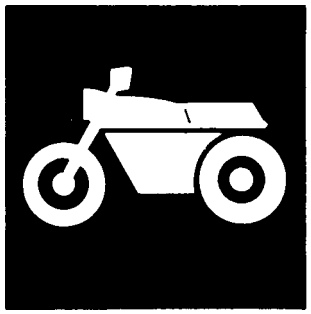

PARTS CATALOGUE

TDM850 (4TX6) EUROPE
TDM850M (4TX7) AUSTRALIA

204TX–300E1

YAMAHA GENUINE Parts & Accessories

A2

A3

FOREWORD

This Parts Catalogue is related to the parts for the model(s) in the below frame. When you are ordering replacement parts, please refer to this Parts Catalogue and quote both part numbers and part names correctly.

TDM850(4TX6),TDM850M(4TX7)

1. Modifications or additions which have been made after issue of the Parts Catalogue will be announced in the Yamaha Parts News.
   It is advisable that you make necessary corrections to the Parts Catalogue according to the Yamaha Parts News.
2. Abbreviations
   The Following abbreviations are used in this Parts Catalogue.
   "UR" Use specified parts number.
   "UN" Use as many as needed.
   "AP" Alternate Parts
   "LM" Local Made (Parts need to be ordered locally)
   "F#" Frame No. (Applicable machine No.)
3. Parts, which are to be supplied in an assembly, are listed with a dot(.) in front of the part name as shown below.

   EXAMPLE
   CARBURETOR ASSY
   .JET, PILOT
   .NOZZLE, MAIN
4. Number of component for assembly
   The numeral appearing to the right of each component part indicates the quantity of parts for each assembly unit.

   EXAMPLE

PART NO.	DESCRIPTION	Q'TY	REMARKS
2F5–83310–60	FRONT FLASHER LIGHT ASSY	2	
115–83311–60	.BULB (6V–18W)	1	
1M1–83309–60	.REFLECTOR	1	

5. Applicable colors of graphics are represented in the "REMARKS" as shown below.

PART NO.	DESCRIPTION	Q'TY	REMARKS
2N4–24110–00–X5	.FUEL TANK COMP.	2	MXR
3J1–24240–10	.GRAPHIC, FUEL TANK	1	for MXR

6. Applicable Serial No.

   Engine Serial No.

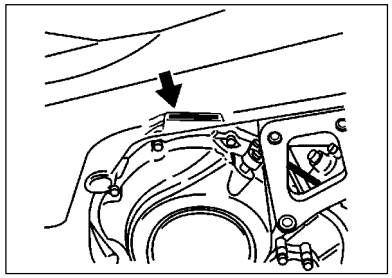

   Frame Serial No.

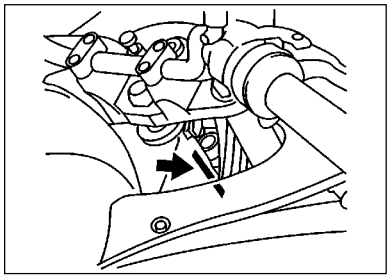

7. Note that the illustrations for reference in funding parts numbers, not to be used for assembling. When assembling, pleas use the applicable service manual.
8. The asterisk (*) before a reference number indicates modification items after the first edition.

MODEL LABEL

(1) A label called “Model Label” is affixed in the location as indicated in (3) below. When using this parts catalogue, please be sure to cross–refer the “model code – production code No.” in the catalogue to the “model code – production code No. “indicated on the Model Label affixed onto the product concemed.

(2) “Model Label”Indication

a b ○ xxxx – xxx ● x c	a: Model Type Code b: Production Code No. c: Colouring Type

○ 4TW1–010 ● A

(3) Model Label Affixing Location

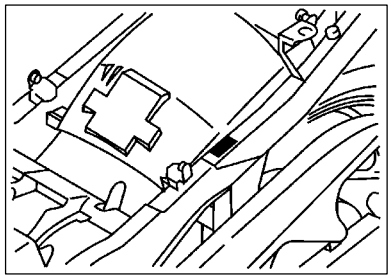

(4) Model Code – Production Code Number of Model Listed in This Parts Catalog

Model Code	Production Code No.	Country (destination)	Model Code	Production Code No.	Country (destination)
4TX6	020	BELGIUM			
	040	DENMARK			
	060	FINLAND			
	070	ENGLAND			
	080	GREECE			
	090	ITALY			
	100	HOLLAND			
	110	NORWAY			
	120	PORTUGAL			
	130	SWEDEN			
4TX7	010	AUSTRALIA			

(5) Colouning Information

Model Code	Colouring type code	Colour code	Colour Name	Abbrevi-ation
4TX6 4TX7	A	004B	BLACK 2	BL2
	B	0660	SILVER METALLIC 1	SM1
	C	0580	VIVID RED COCKTAIL 7	VRC7

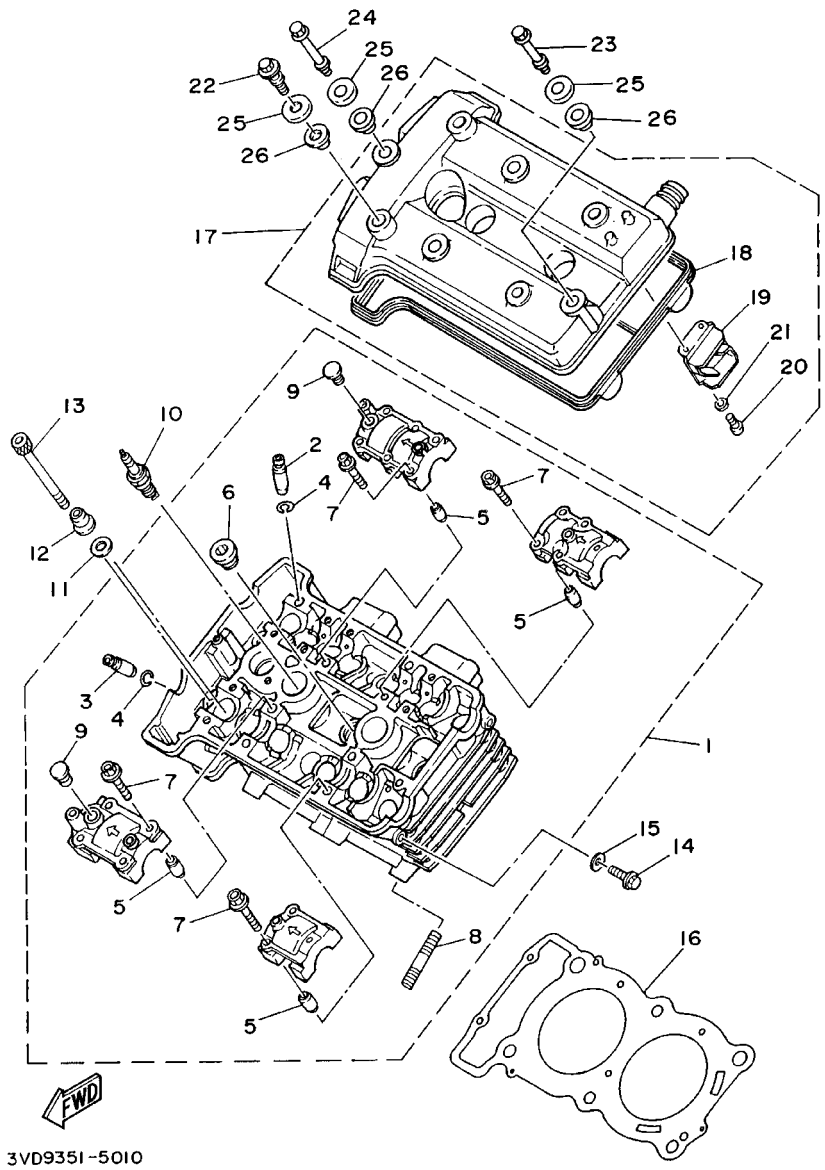

FIG. 1 CYLINDER HEAD

REF. NO.	PART NO.	DESCRIPTION	4TX6	4TX7				REMARKS
1	3VD–11101–20	CYLINDER HEAD ASSY	1	1				
2	3LD–11133–10	.GUIDE, INTAKE VALVE	6	6				
3	3LD–11134–10	.GUIDE, EXHAUST VALVE	4	4				
4	93440–10109	.CIRCLIP	10	10				
5	99510–08016	.PIN, DOWEL	8	8				
6	90340–18101	.PLUG, STRAIGHT SCREW	2	2				
7	90105–06153	.BOLT, WASHER BASED	16	16				
8	90116–08548	.BOLT, STUD	4	4				
9	90338–10150	.PLUG	2	2				
10	94701–00241	PLUG, SPARK (NGK DPR8EA–9)	2	2				UR
	94701–00242	PLUG, SPARK (ND X24EPR–U9)	2	2				UR
11	90201–103M4	WASHER, PLATE	6	6				
12	90179–10414	NUT	6	6				
13	91317–06150	BOLT	2	2				
14	95024–08012	BOLT, FLANGE	1	1				
15	90430–08119	GASKET	1	1				
16	4NX–11181–00	GASKET, CYLINDER HEAD 1	1	1				
17	4NX–Y1119–10	COVER ASSY, CYLINDER HEAD	1	1				
18	3LD–11193–01	.GASKET, HEAD COVER 1	1	1				
19	3LD–11160–02	.BREATHER ASSY	1	1				
20	98507–04006	.SCREW, PAN HEAD	2	2				
21	92907–04600	.WASHER	2	2				
22	90109–064F0	BOLT	6	6				
23	90109–062G1	BOLT	1	1				
24	90109–062G2	BOLT	1	1				
25	90209–11262	WASHER	8	8				
26	2GH–1111G–00	RUBBER, MOUNT 1	8	8				

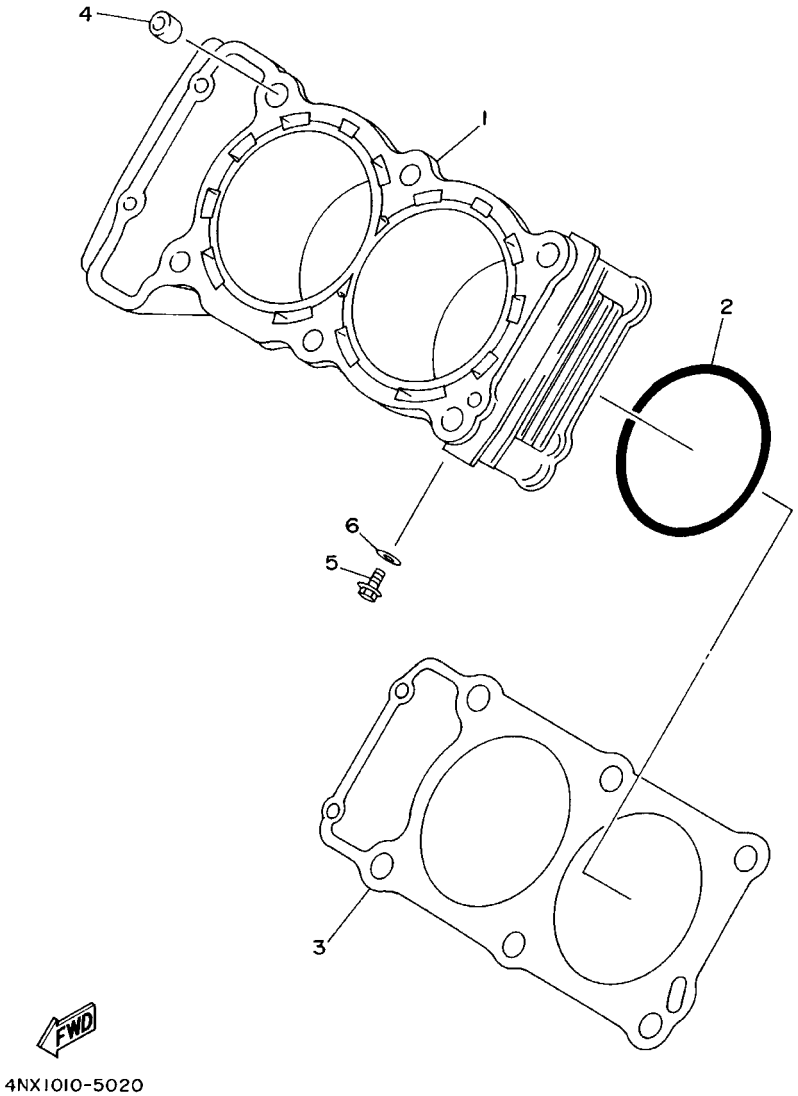

FIG. 2 CYLINDER

REF. NO.	PART NO.	DESCRIPTION	4TX6	4TX7				REMARKS
1	4UN–11310–00	CYLINDER	1	1				
2	93210–90785	O–RING	2	2				
3	3VD–11351–00	GASKET, CYLINDER	1	1				
4	99530–14016	PIN, DOWEL	2	2				
5	90153–06029	SCREW, HEXAGON	1	1				
6	90430–06014	GASKET	1	1				

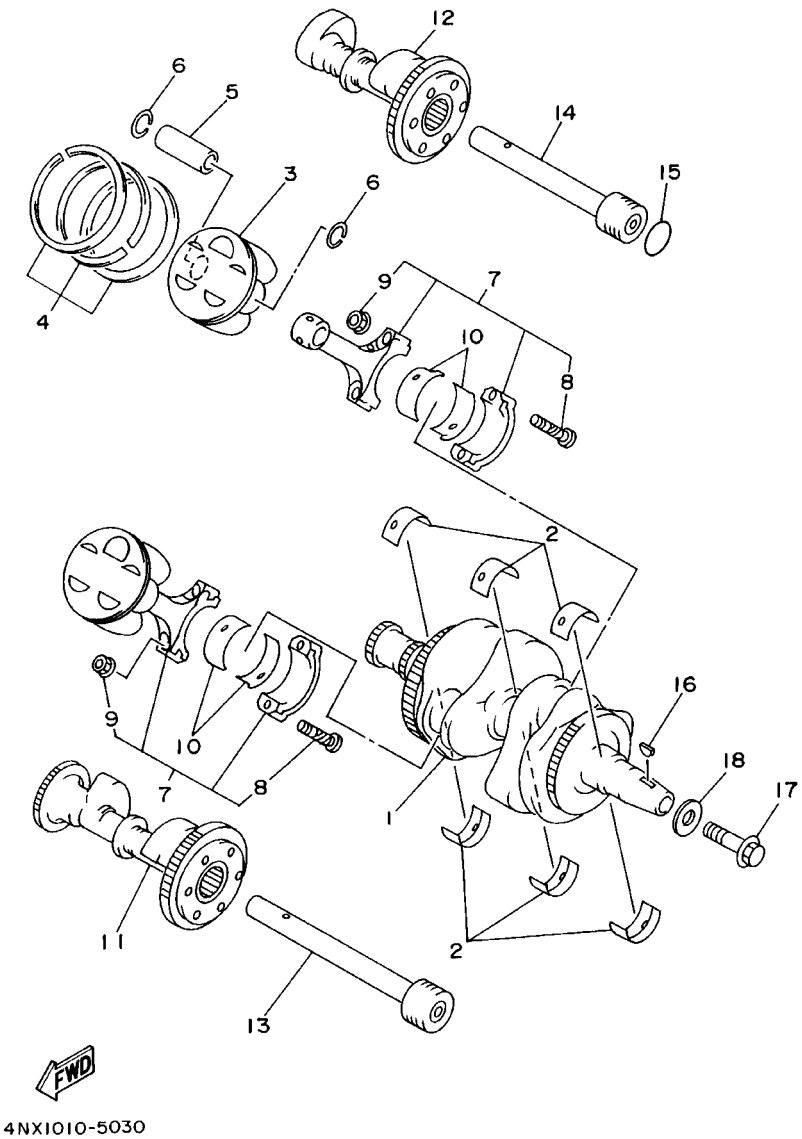

FIG. 3 CRANKSHAFT. PISTON

REF. NO.	PART NO.	DESCRIPTION	4TX6	4TX7				REMARKS
1	4NX–11400–00	CRANKSHAFT ASSY	1	1				
2	3LD–11416–00	PLANE BEARING, CRANKSHAFT 1	6	6				UR BLUE
	3LD–11416–10	PLANE BEARING, CRANKSHAFT 1	6	6				UR BLACK
	3LD–11416–20	PLANE BEARING, CRANKSHAFT 1	6	6				UR BROWN
	3LD–11416–30	PLANE BEARING, CRANKSHAFT 1	6	6				UR GREEN
	3LD–11416–40	PLANE BEARING, CRANKSHAFT 1	6	6				UR YELLOW
	3LD–11416–50	PLANE BEARING, CRANKSHAFT 1	6	6				UR PINK
	3LD–11416–60	PLANE BEARING, CRANKSHAFT 1	6	6				UR RED
3	4NX–11631–00	PISTON (STD)	2	2				
	4NX–11636–00	PISTON (0.50MM O/S)	2	2				AP
	4NX–11638–00	PISTON (1.00MM O/S)	2	2				AP
4	3VD–11610–00	PISTON RING SET (STD)	2	2				
	3VD–11610–20	PISTON RING SET (0.50MM O/S)	2	2				AP
	3VD–11610–40	PISTON RING SET (1.00MM O/S)	2	2				AP
5	3LD–11633–00	PIN, PISTON	2	2				
6	93450–22027	CIRCLIP	4	4				
7	3VD–11650–00	CONNECTING ROD ASSY	2	2				
8	3LD–11654–00	.BOLT, CONNECTING ROD	2	2				
9	90179–09379	.NUT	2	2				
10	3LD–11656–00	PLANE BEARING, CONNECTING ROD	4	4				UR BLUE
	3LD–11656–10	PLANE BEARING, CONNECTING ROD	4	4				UR BLACK
	3LD–11656–20	PLANE BEARING, CONNECTING ROD	4	4				UR BROWN
	3LD–11656–30	PLANE BEARING, CONNECTING ROD	4	4				UR GREEN
11	4NX–11500–00	BALANCER ASSY	1	1				
12	4NX–11510–00	BALANCER ASSY, 2	1	1				
13	3LD–11583–00	SHAFT, BALANCER 1	1	1				
14	3LD–11584–00	SHAFT, BALANCER 2	1	1				

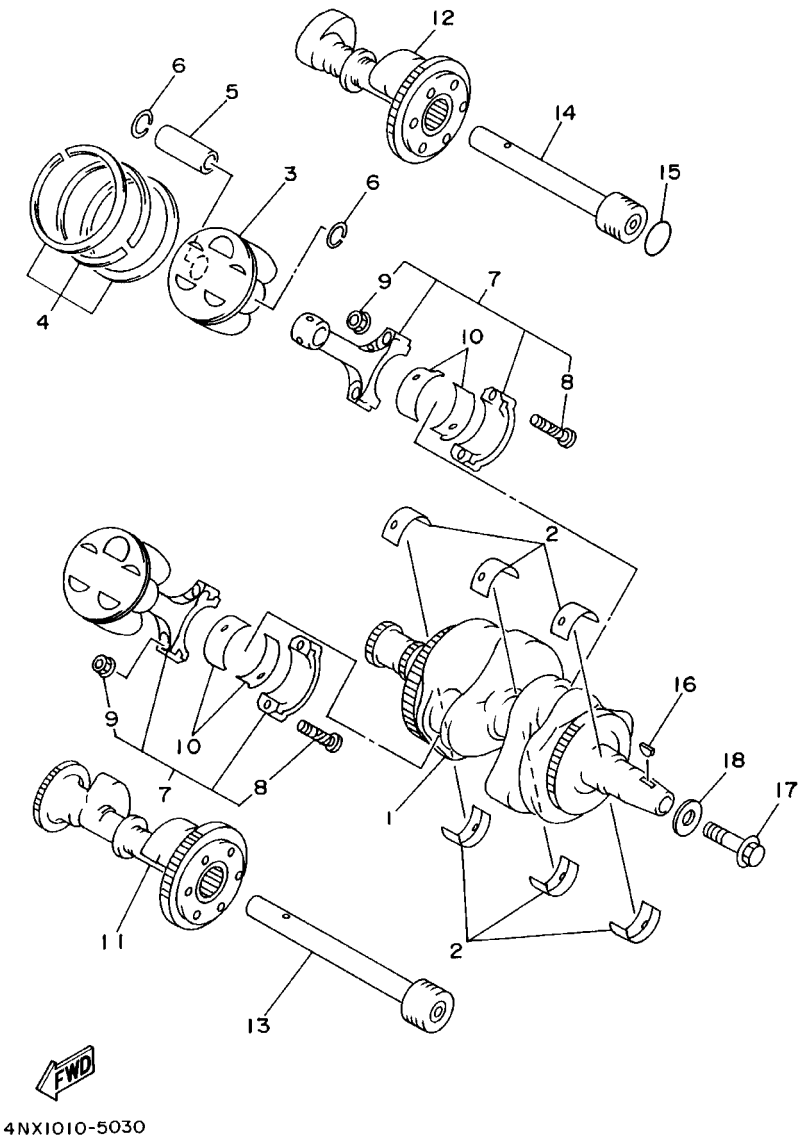

FIG. 3 CRANKSHAFT. PISTON

REF. NO.	PART NO.	DESCRIPTION	4TX6	4TX7				REMARKS
15	93210–30660	O–RING	1	1				
16	90280–05029	KEY, WOODRUFF	1	1				
17	90105–12584	BOLT, WASHER BASED	1	1				
18	90201–121H0	WASHER, PLATE	1	1				

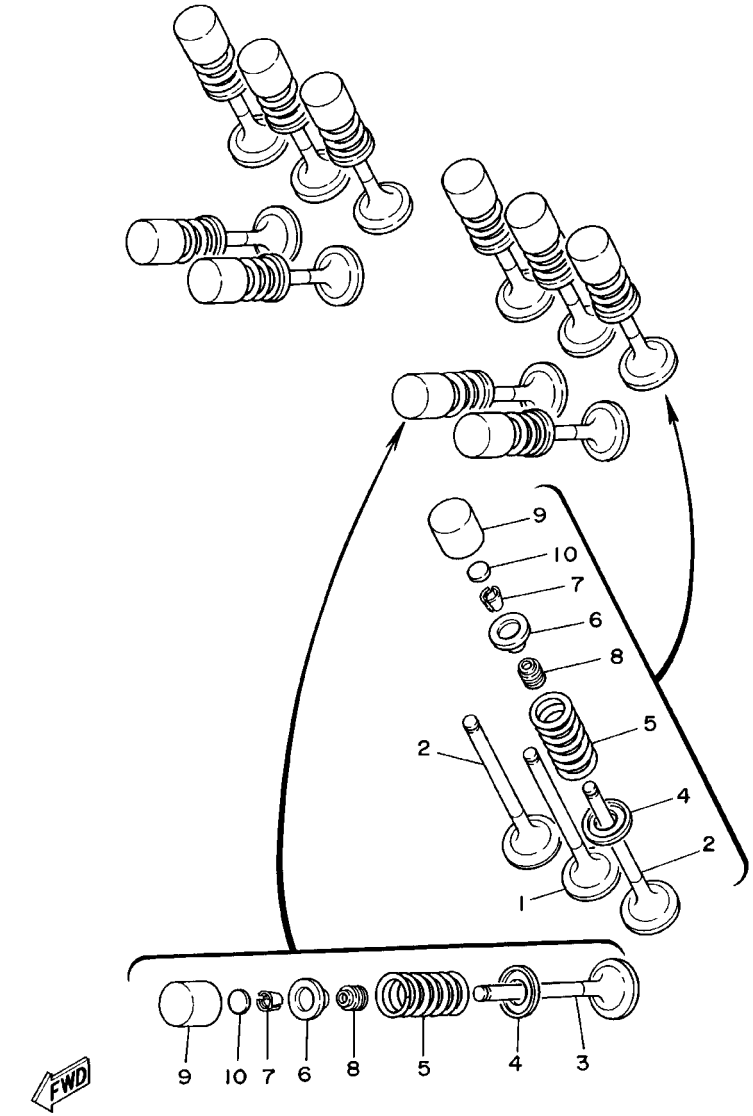

FIG. 4 VALVE

REF. NO.	PART NO.	DESCRIPTION	4TX6	4TX7				REMARKS
1	3LD–12111–01	VALVE, INTAKE (3LD.)	2	2				
2	3LD–12112–01	VALVE, INTAKE 2 (3LD:)	4	4				
3	3LD–12121–00	VALVE, EXHAUST (3LD)	4	4				
4	1WG–12116–00	SEAT, VALVE SPRING	10	10				
5	3LD–12113–00	SPRING, VALVE INNER	10	10				BLUE
6	3LD–12117–00	RETAINER, VALVE SPRING	10	10				
7	3LD–12118–00	COTTER, VALVE	20	20				
8	51Y–12119–00	SEAL, VALVE STEM	10	10				
9	1WG–12153–21	LIFTER, VALVE	10	10				UR BLUE
	1WG–12153–31	LIFTER, VALVE	10	10				UR RED
10	3LD–12168–00	PAD, ADJUSTING (1.20)	10	10				UR
	3LD–12168–20	PAD, ADJUSTING (1.25)	10	10				UR
	3LD–12168–40	PAD, ADJUSTING (1.30)	10	10				UR
	3LD–12168–60	PAD, ADJUSTING (1.35)	10	10				UR
	3LD–12168–80	PAD, ADJUSTING (1.40)	10	10				UR
	3LD–12168–A0	PAD, ADJUSTING (1.45)	10	10				UR
	3LD–12168–F0	PAD, ADJUSTING (1.50)	10	10				UR
	3LD–12168–H1	PAD, ADJUSTING (1.55)	10	10				UR
	3LD–12168–K1	PAD, ADJUSTING (1.60)	10	10				UR
	3LD–12168–M1	PAD, ADJUSTING (1.65)	10	10				UR
	3LD–12168–R1	PAD, ADJUSTING (1.70)	10	10				UR
	3LD–12168–U1	PAD, ADJUSTING (1.75)	10	10				UR
	3LD–12168–W1	PAD, ADJUSTING (1.80)	10	10				UR
	3LD–12168–Y1	PAD, ADJUSTING (1.85)	10	10				UR
	3LD–12169–11	PAD, ADJUSTING (1.90)	10	10				UR
	3LD–12169–31	PAD, ADJUSTING (1.95)	10	10				UR
	3LD–12169–50	PAD, ADJUSTING (2.00)	10	10				UR

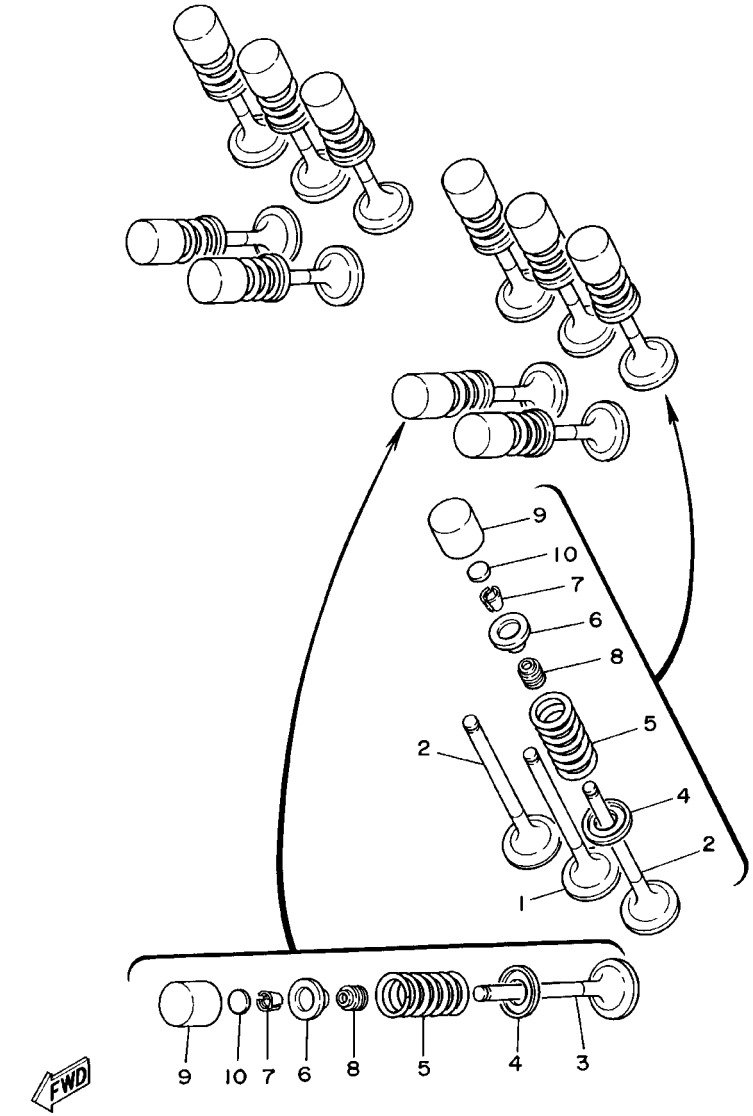

FIG. 4 VALVE

REF. NO.	PART NO.	DESCRIPTION	4TX6	4TX7				REMARKS
10	3LD–12169–70	PAD, ADJUSTING (2.05)	10	10				UR
	3LD–12169–90	PAD, ADJUSTING (2.10)	10	10				UR
	3LD–12169–E0	PAD, ADJUSTING (2.15)	10	10				UR
	3LD–12169–G0	PAD, ADJUSTING (2.20)	10	10				UR
	3LD–12169–J0	PAD, ADJUSTING (2.25)	10	10				UR
	3LD–12169–L0	PAD, ADJUSTING (2.30)	10	10				UR
	3LD–12169–N0	PAD, ADJUSTING (2.35)	10	10				UR
	3LD–12169–T0	PAD, ADJUSTING (2.40)	10	10				UR

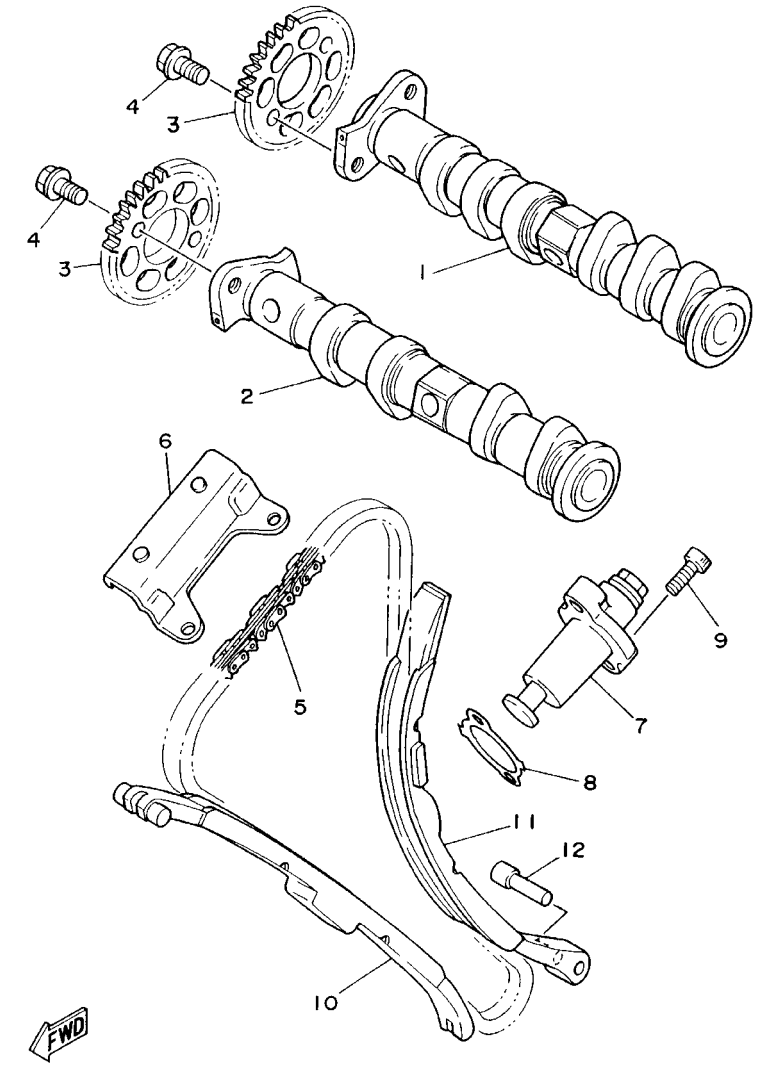

FIG. 5 CAMSHAFT. CHAIN

REF. NO.	PART NO.	DESCRIPTION	4TX6	4TX7				REMARKS
1	4NX–12171–00	CAMSHAFT 1	1	1				
2	4NX–12181–00	CAMSHAFT 2	1	1				
3	3LD–12176–00	SPROCKET, CAM CHAIN	2	2				
4	90105–07342	BOLT, WASHER BASED	4	4				
5	94591–40138	CHAIN (82RH2015–138L)	1	1				
6	3LD–12241–00	GUIDE, STOPPER 2	1	1				
7	3LD–12210–00	TENSIONER ASSY, CAM CHAIN	1	1				
8	3VD–12213–00	GASKET, TENSIONER CASE	1	1				
9	91314–06025	BOLT	2	2				
10	3LD–12251–00	DAMPER, CHAIN 1	1	1				
11	3LD–12252–00	DAMPER, CHAIN 2	1	1				
12	3LD–12247–00	SHAFT, TENSIONER	1	1				

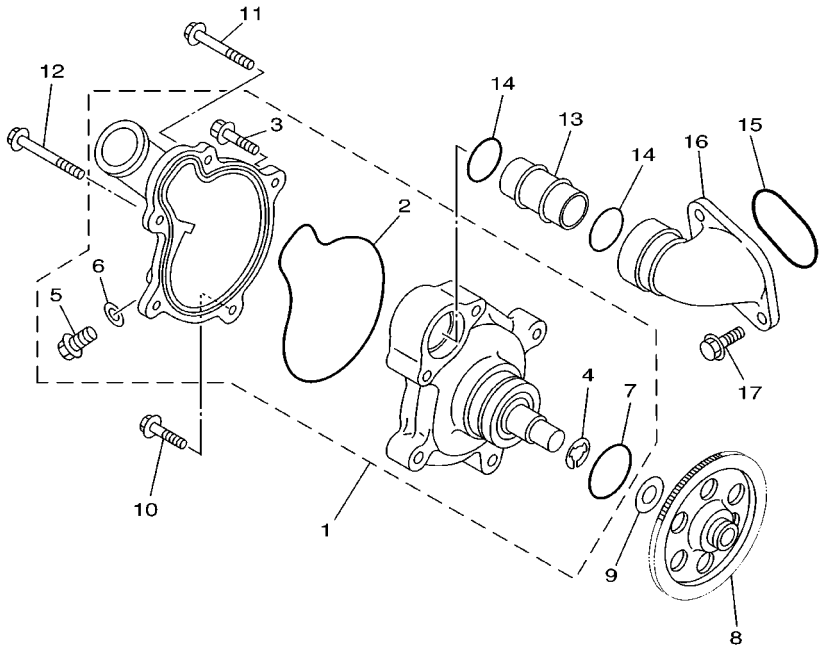

4TX1351-6060

FIG. 6 WATER PUMP

REF. NO.	PART NO.	DESCRIPTION	4TX6	4TX7				REMARKS
1	4UN–Y1242–00	WATER PUMP ASSY	1	1				
2	3LD–12439–00	.O–RING	1	1				
3	95024–06020	.BOLT, FLANGE	2	2				
4	99009–12400	.CIRCLIP	1	1				
5	95024–06012	.BOLT, FLANGE	1	1				
6	90430–06014	.GASKET	1	1				
7	93210–33133	.O–RING	1	1				
8	3VD–12459–00	GEAR, IMPELLER SHAFT	1	1				
9	90201–127E1	WASHER, PLATE	1	1				
10	95024–06030	BOLT, FLANGE	1	1				
11	95024–06045	BOLT, FLANGE	1	1				
12	95024–06060	BOLT, FLANGE	1	1				
13	3LD–12481–00	PIPE 1	1	1				
14	93210–21190	O–RING	2	2				
15	93210–357A2	O–RING	1	1				
16	4UN–12469–00	JOINT 1	1	1				
17	95027–06016	BOLT, FLANGE	2	2				

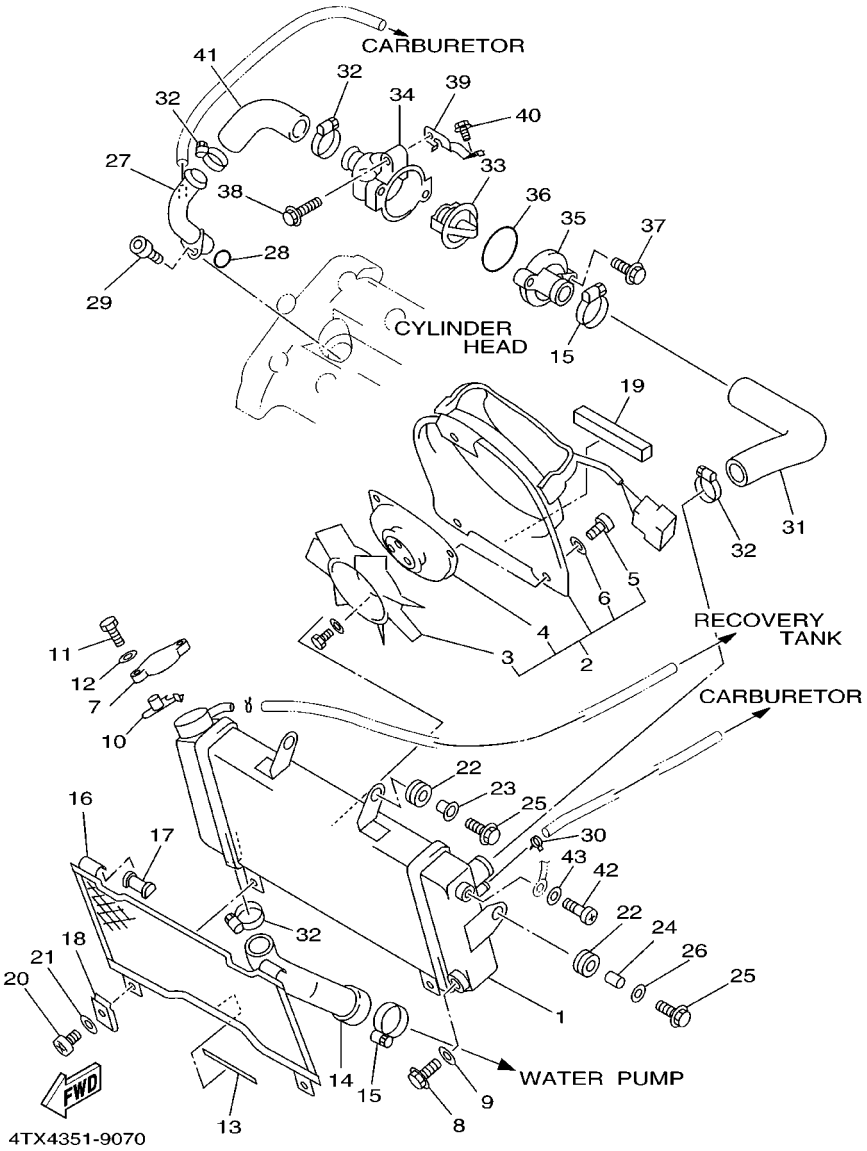

FIG. 7 RADIATOR. HOSE

REF. NO.	PART NO.	DESCRIPTION	4TX6	4TX7				REMARKS
1	4TX–12461–40	RADIATOR ASSY	1	1				
2	4TX–12405–00	BLOWER ASSY	1	1				
3	1UF–12611–00	.FAN	1	1				
4	26H–12630–00	.MOTOR ASSY	1	1				
5	98507–05008	.SCREW, PAN HEAD	3	3				
6	92990–05600	.WASHER, PLATE	3	3				
7	4FL–12462–00	CAP, RADIATOR	1	1				
8	1AA–12561–00	PLUG,DRAIN COCK	1	1				
9	1AA–12435–00	GASKET	1	1				
10	1KT–12437–00	STOPPER	1	1				
11	97007–05012	BOLT	1	1				
12	92907–05600	WASHER, PLATE	1	1				
13	3VD–12465–00	DAMPER, RADIATOR	1	1				
14	4TX–12578–00	HOSE 3	1	1				
15	90450–38040	HOSE CLAMP ASSY	2	2				
16	1UF–12467–00	COVER, RADIATOR	1	1				
17	1UF–12435–00	GASKET	2	2				
18	90183–05024	NUT, SPRING	2	2				
19	4TX–12465–00	DAMPER, RADIATOR	1	1				
20	98507–05010	SCREW, PAN HEAD	2	2				
21	92907–05600	WASHER, PLATE	2	2				
22	90480–15363	GROMMET	4	4				
23	90387–0614M	COLLAR	2	2				
24	90387–0714B	COLLAR	2	2				
25	95807–06025	BOLT, FLANGE	4	4				
26	90201–06071	WASHER, PLATE	2	2				
27	4NX–12482–00	PIPE 2	1	1				

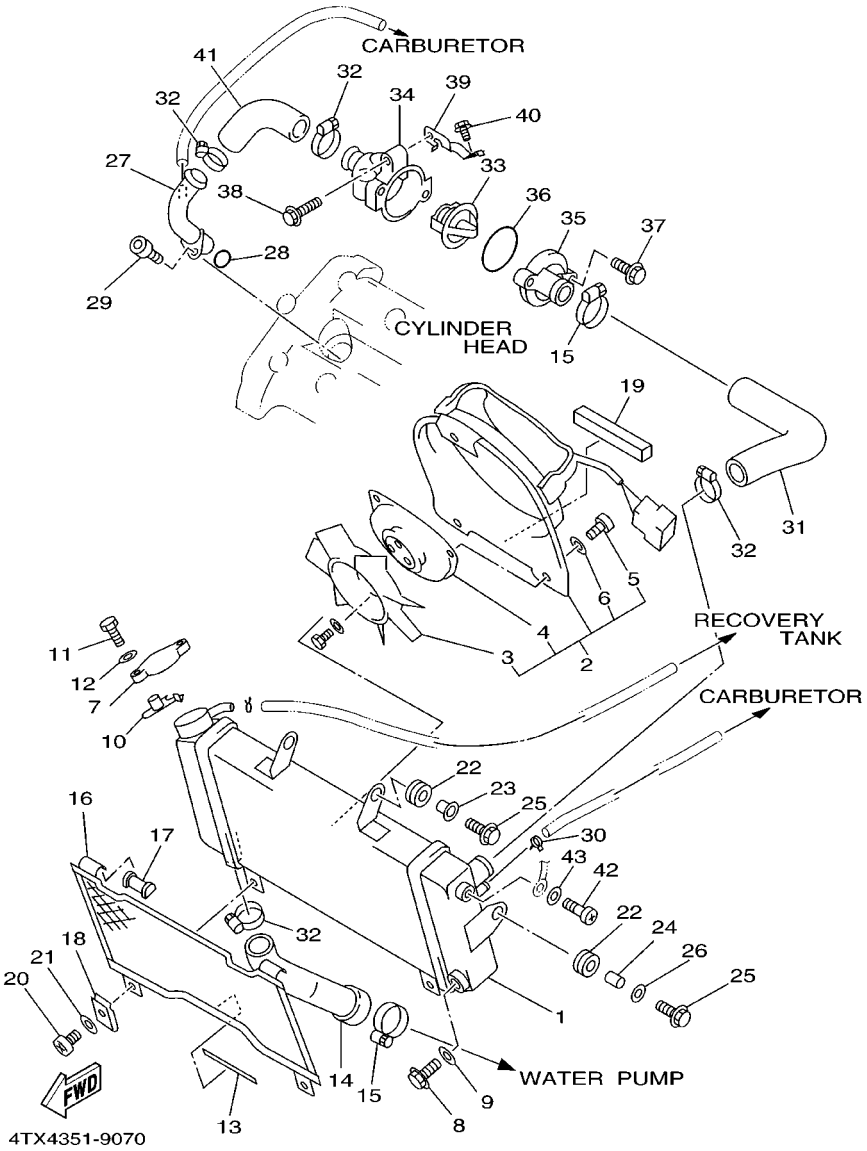

FIG. 7 RADIATOR. HOSE

REF. NO.	PART NO.	DESCRIPTION	4TX6	4TX7				REMARKS
28	93210–18417	O–RING	1	1				
29	91317–06016	BOLT	1	1				
30	90467–11090	CLIP	1	1				
31	4TX–12576–40	HOSE 1	1	1				
32	90450–32015	HOSE CLAMP ASSY	4	4				
33	1AE–12410–00	THERMOSTAT ASSY	1	1				
34	4TX–12417–40	HOUSING, THERMOSTAT	1	1				
35	4NX–12413–00	COVER, THERMOSTAT	1	1				
36	93210–49046	O–RING	1	1				
37	95027–06020	BOLT, FLANGE	2	2				
38	95027–06025	BOLT, FLANGE	1	1				
39	4TX–1244E–00	BRACKET 1	1	1				
40	95027–06014	BOLT, FLANGE	1	1				
41	4NX–12579–00	HOSE 4	1	1				
42	98507–04008	SCREW, PAN HEAD	1	1				
43	92907–04600	WASHER	1	1				

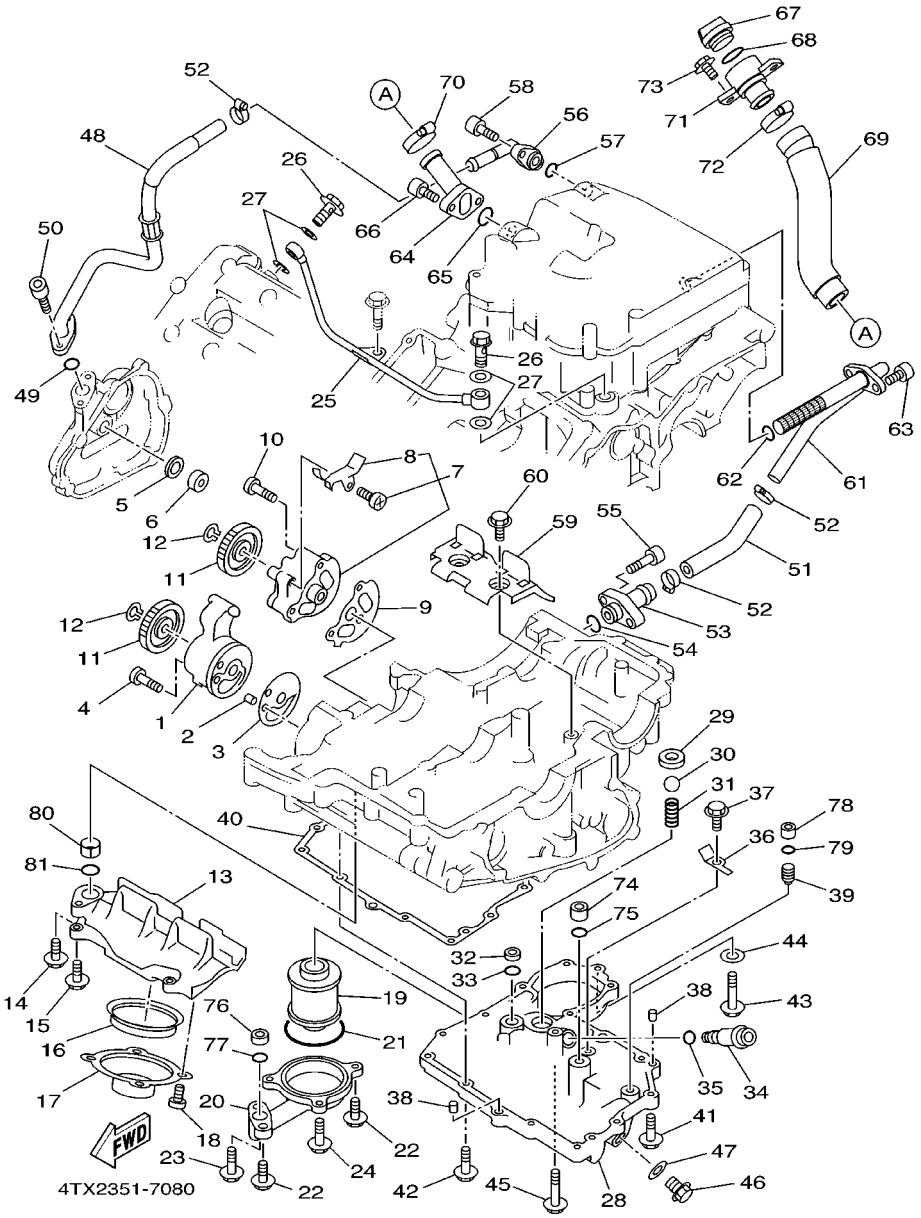

FIG. 8 OIL PUMP

REF. NO.	PART NO.	DESCRIPTION	4TX6	4TX7				REMARKS
1	3LD–13300–00	OIL PUMP ASSY	1	1				
2	99530–08012	PIN, DOWEL	1	1				
3	3LD–13329–00	GASKET, PUMP COVER	1	1				
4	98507–06045	SCREW, PAN HEAD	3	3				
5	90430–14131	GASKET	1	1				
6	90387–120W5	COLLAR	1	1				
7	4NX–13303–00	OIL PUMP ASSY, 2	1	1				
8	3LD–13371–00	.PLATE	1	1				
9	3LD–13339–00	GASKET, PUMP COVER	1	1				
10	98507–06035	SCREW, PAN HEAD	3	3				
11	3VD–13325–00	GEAR, PUMP DRIVEN	2	2				
12	99009–11400	CIRCLIP	2	2				
13	3VD–13412–00	HOUSING, STRAINER	1	1				
14	95027–06025	BOLT, FLANGE	1	1				
15	95027–06020	BOLT, FLANGE	4	4				
16	3VD–13415–00	SEAL, OIL STRAINER	1	1				
17	3VD–13411–00	STRAINER, OIL	1	1				
18	98507–06010	SCREW, PAN HEAD	4	4				
19	4X7–13440–01	ELEMENT ASSY, OIL CLEANER	1	1				
20	3VD–13447–00	COVER, OIL ELEMENT	1	1				
21	93210–64297	O–RING	1	1				
22	95024–06020	BOLT, FLANGE	2	2				
23	95024–06030	BOLT, FLANGE	1	1				
24	95024–06040	BOLT, FLANGE	2	2				
25	3LD–13161–00	PIPE, DELIVERY 1	1	1				
26	90401–10106	BOLT, UNION	2	2				
27	90430–10188	GASKET	4	4				

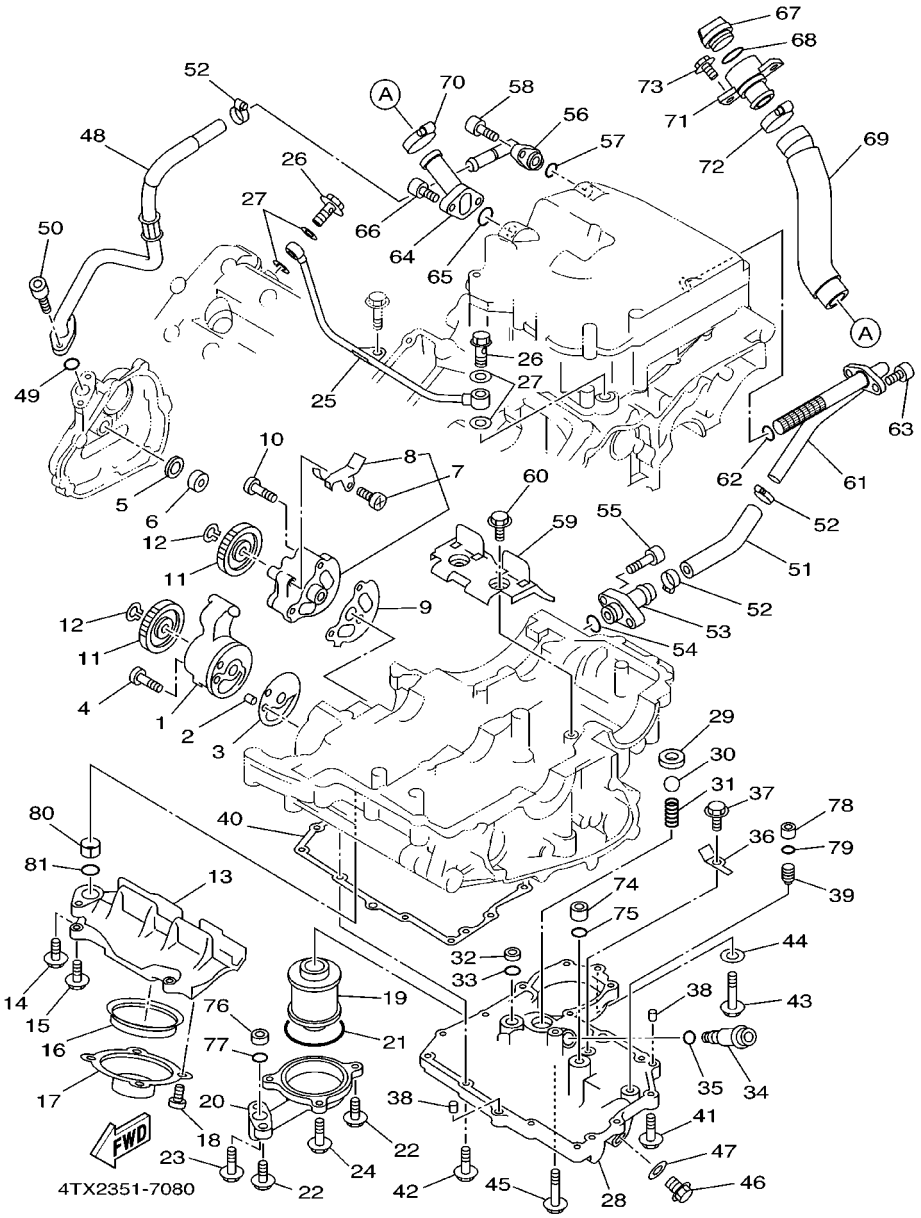

FIG. 8 OIL PUMP

REF. NO.	PART NO.	DESCRIPTION	4TX6	4TX7				REMARKS
28	3VD–13417–10	COVER, STRAINER	1	1				
29	3LD–13113–00	SEAT, CHECK BALL	1	1				
30	93505–08030	BALL	1	1				
31	90501–104F9	SPRING, COMPRESSION	1	1				
32	90387–106W6	COLLAR	1	1				
33	93210–12790	O–RING	1	1				
34	11H–13490–00	RELIEF VALVE ASSY	1	1				
35	93210–10096	O–RING	1	1				
36	3LD–13151–00	STAY	1	1				
37	90105–06553	BOLT, WASHER BASED	1	1				
38	99530–08016	PIN, DOWEL	2	2				
39	4H7–15138–00	NOZZLE 1	1	1				
40	3VD–13414–00	GASKET, STRAINER COVER	1	1				
41	90105–06456	BOLT, WASHER BASED	2	2				
42	95024–06025	BOLT, FLANGE	11	11				
43	95024–10040	BOLT, FLANGE	1	1				
44	90430–10188	GASKET	1	1				
45	95027–06035	BOLT, FLANGE	1	1				
46	90340–14132	PLUG, STRAIGHT SCREW	1	1				
47	214–11198–01	GASKET	1	1				
48	4UN–13464–01	HOSE, OIL 1	1	1				
49	93210–13657	O–RING	1	1				
50	91314–06020	BOLT	2	2				
51	4TX–13465–00	HOSE, OIL 2	1	1				
52	90460–27270	CLAMP, HOSE	3	3				
53	3VD–13416–00	PIPE, OIL 1	1	1				
54	93210–13657	O–RING	1	1				

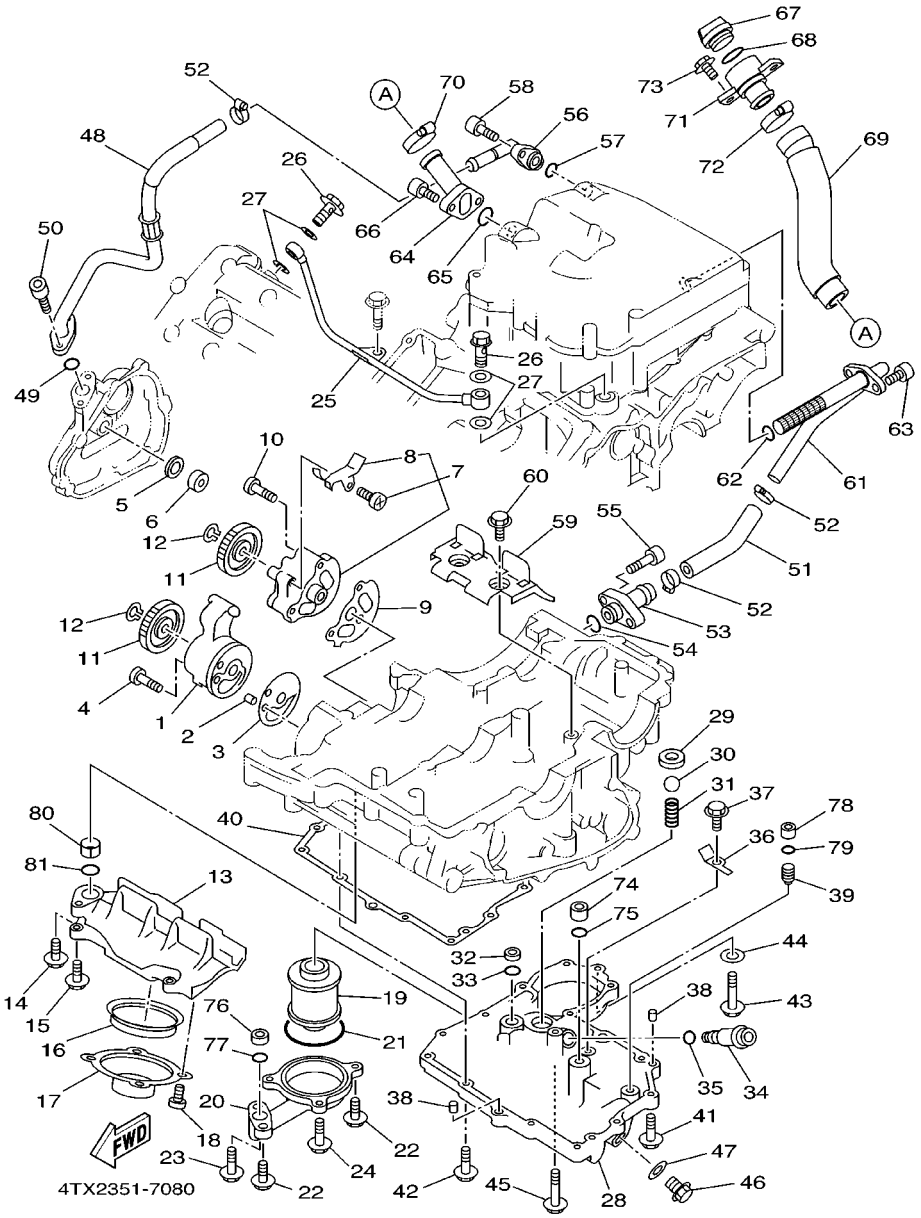

FIG. 8 OIL PUMP

REF. NO.	PART NO.	DESCRIPTION	4TX6	4TX7				REMARKS
55	90110–06093	BOLT, HEXAGON SOCKET HEAD	2	2				
56	4NX–13418–00	PIPE, OIL 2	1	1				
57	93210–13657	O–RING	1	1				
58	91314–06020	BOLT	2	2				
59	3VD–13317–00	PLATE, BAFFLE	1	1				
60	90105–06553	BOLT, WASHER BASED	2	2				
61	4TX–13416–00	PIPE, OIL 1	1	1				
62	93210–16629	O–RING	1	1				
63	91314–06020	BOLT	2	2				
64	4TX–13132–00	JOINT	1	1				
65	93210–26741	O–RING	1	1				
66	91314–06025	BOLT	2	2				
67	3F9–15362–00	PLUG, OIL LEVEL	1	1				
68	93210–27370	O–RING	1	1				
69	4TX–13467–00	HOSE	1	1				
70	90450–32015	HOSE CLAMP ASSY	1	1				
71	4TX–13266–00	CONNECTOR, OIL	1	1				
72	90450–38040	HOSE CLAMP ASSY	1	1				
73	95027–06016	BOLT, FLANGE	2	2				
74	90387–085N0	COLLAR	1	1				
75	93210–10096	O–RING	1	1				
76	90387–106W6	COLLAR	1	1				
77	93210–12790	O–RING	1	1				
78	90387–06761	COLLAR	1	1				
79	93210–07135	O–RING	1	1				
80	90387–130W6	COLLAR	1	1				
81	93210–15566	O–RING	1	1				

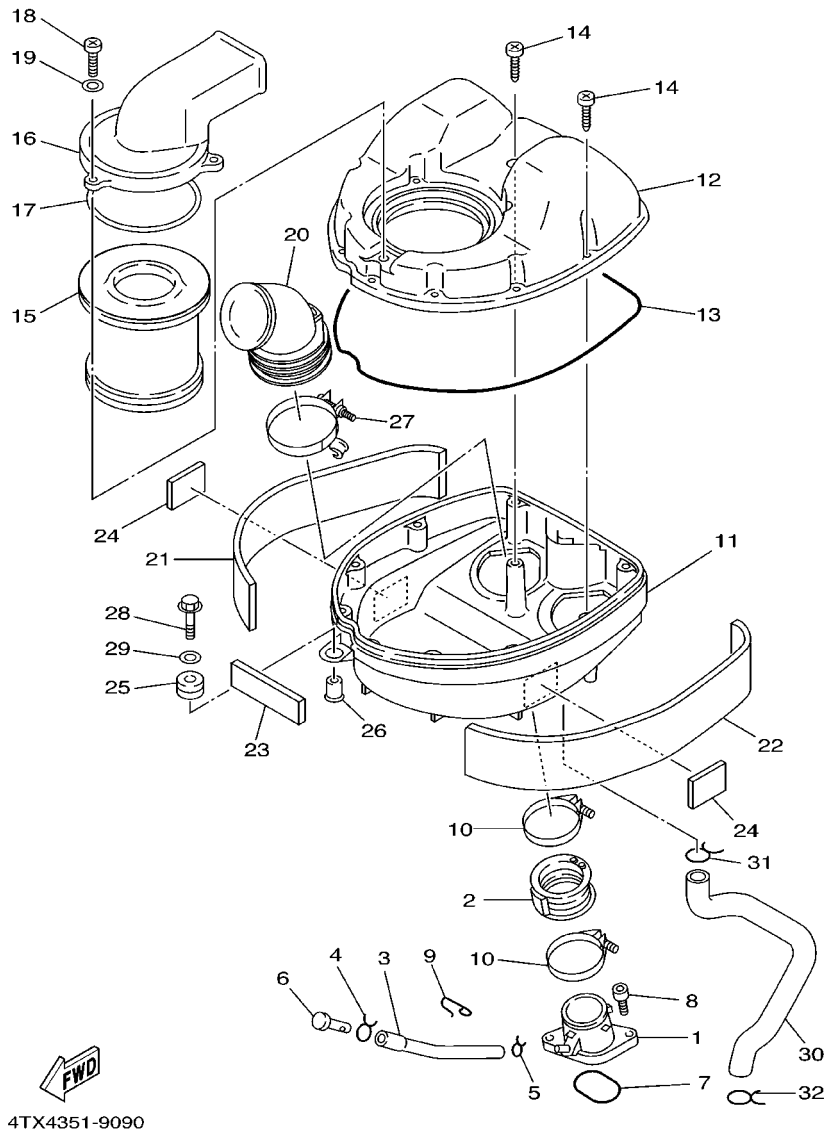

FIG. 9 INTAKE

REF. NO.	PART NO.	DESCRIPTION	4TX6	4TX7				REMARKS
1	3LD–13586–01	JOINT, CARBURETOR 1	2	2				
2	3LD–13597–01	JOINT, CARBURETOR 3	2	2				
3	90445–090E5	HOSE	2	2				
4	90467–08017	CLIP	2	2				
5	90467–08075	CLIP	2	2				
6	90338–05194	PLUG	2	2				
7	93210–44545	O–RING	2	2				
8	91317–06020	BOLT	4	4				
9	90465–20035	CLAMP	1	1				
10	90450–57034	HOSE CLAMP ASSY	4	4				
11	4TX–14411–40	CASE, AIR CLEANER 1	1	1				
12	3VD–14421–00	CASE, AIR CLEANER 2	1	1				
13	4BR–14452–00	SEAL	1	1				
14	97707–50125	SCREW, TAPPING	10	10				
15	1AE–14451–00	ELEMENT, AIR CLEANER	1	1				
16	3VD–14422–00	CAP, CLEANER CASE 2	1	1				
17	1AE–14452–00	SEAL	1	1				
18	98507–05016	SCREW, PAN HEAD	3	3				
19	92907–05600	WASHER, PLATE	3	3				
20	4TX–14453–40	JOINT, AIR CLEANER 1	2	2				
21	4TX–14425–40	DAMPER 1	1	1				
22	4TX–14426–40	DAMPER 2	1	1				
23	3VD–1442G–00	DAMPER 3	1	1				
24	4N0–24181–00	DAMPER, LOCATING 1	2	2				
25	90480–14604	GROMMET	1	1				
26	90387–07391	COLLAR	1	1				
27	90450–75083	HOSE CLAMP ASSY	2	2				

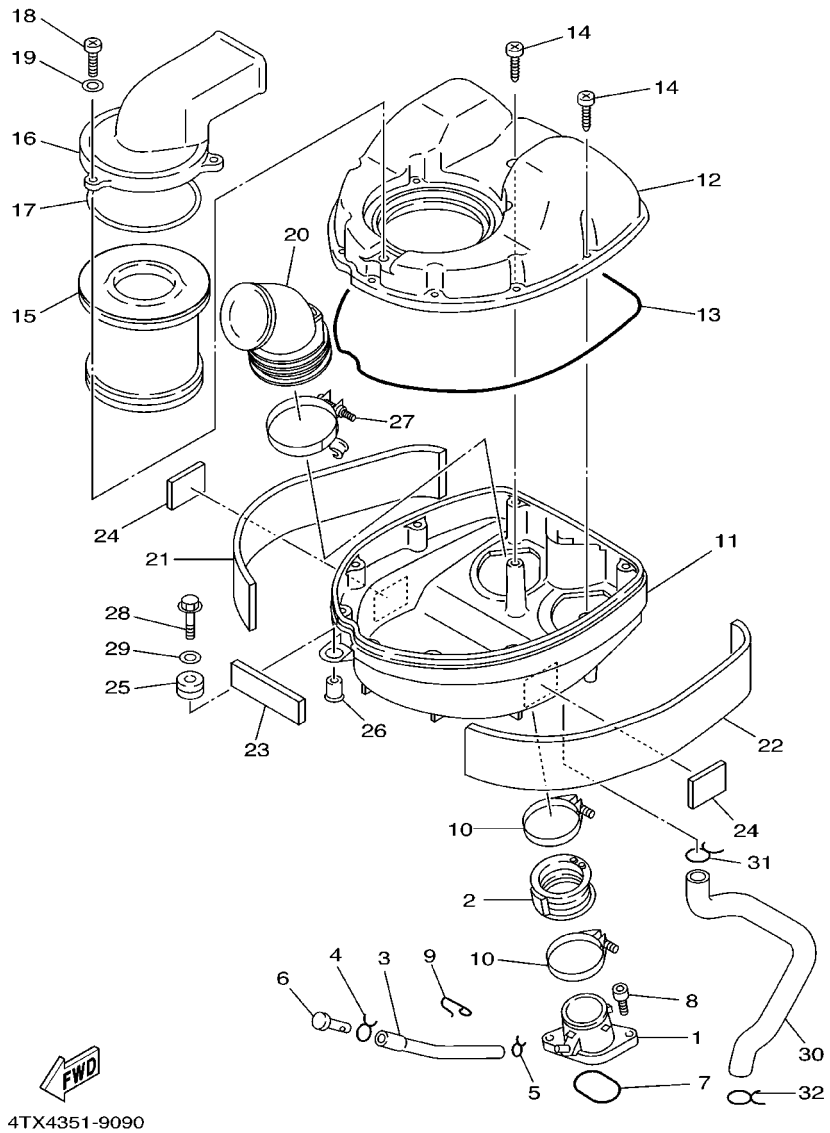

FIG. 9 INTAKE

REF. NO.	PART NO.	DESCRIPTION	4TX6	4TX7				REMARKS
28	97007–06025	BOLT	1	1				
29	90201–06063	WASHER, PLATE	1	1				
30	4TX–11166–01	PIPE, BREATHER 1	1	1				
31	90467–22080	CLIP	1	1				
32	90467–24113	CLIP	1	1				

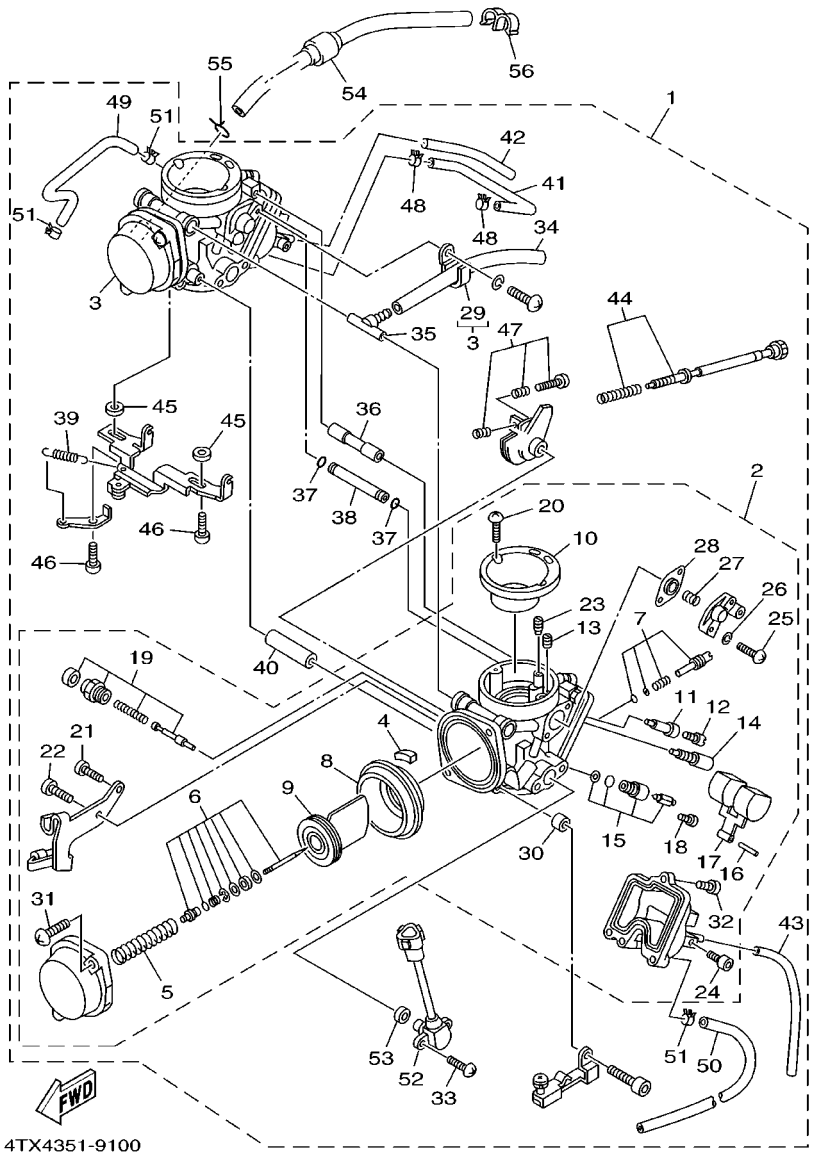

FIG. 10 CARBURETOR

REF. NO.	PART NO.	DESCRIPTION	4TX6	4TX7				REMARKS
1	4TX–14900–40	CARBURETOR ASSY	1	1				
2	4TX–14901–40	.CARBURETOR ASSY 1	1	1				
3	4TX–14902–40	.CARBURETOR ASSY 2	1	1				
4	4SV–14968–00	..CAP	1	1				
5	4TX–14275–00	..SPRING	1	1				
6	4TX–1490J–40	..NEEDLE SET	1	1				UR #1
	4TX–1490J–50	..NEEDLE SET	1	1				UR #2
7	5DM–14105–00	..PILOT SCREW SET	1	1				
8	4SV–24411–00	..DIAPHRAGM	1	1				
9	4SV–14112–00	..VALVE, THROTTLE 1	1	1				
10	4TX–14479–00	..FUNNEL	1	1				
11	4TX–14261–00	..HOLDER	1	1				
12	3G2–1423A–80	..JET, MAIN (#147.5)	1	1				
13	1HX–1423A–68	..JET, MAIN (# 87.5)	1	1				
14	4KM–14142–17	..JET, PILOT (# 17.5)	1	1				
15	4KM–14107–15	..NEEDLE VALVE SET	1	1				
16	620–14186–00	..PIN, FLOAT	1	1				
17	4SV–14985–00	..FLOAT	1	1				
18	1FN–14565–00	..SCREW	1	1				
19	4SV–1410A–00	..STARTER SET	1	1				
20	98507–04018	..SCREW, PAN HEAD	2	2				
21	98507–04008	..SCREW, PAN HEAD	1	1				
22	98507–05010	..SCREW, PAN HEAD	1	1				
23	1HX–14231–24	..JET, MAIN (#120)	1	1				
24	4KP–14191–00	..PLUG, DRAIN	1	1				
25	98507–04014	..SCREW, PAN HEAD	2	2				
26	92907–04100	..WASHER, SPRING	2	2				

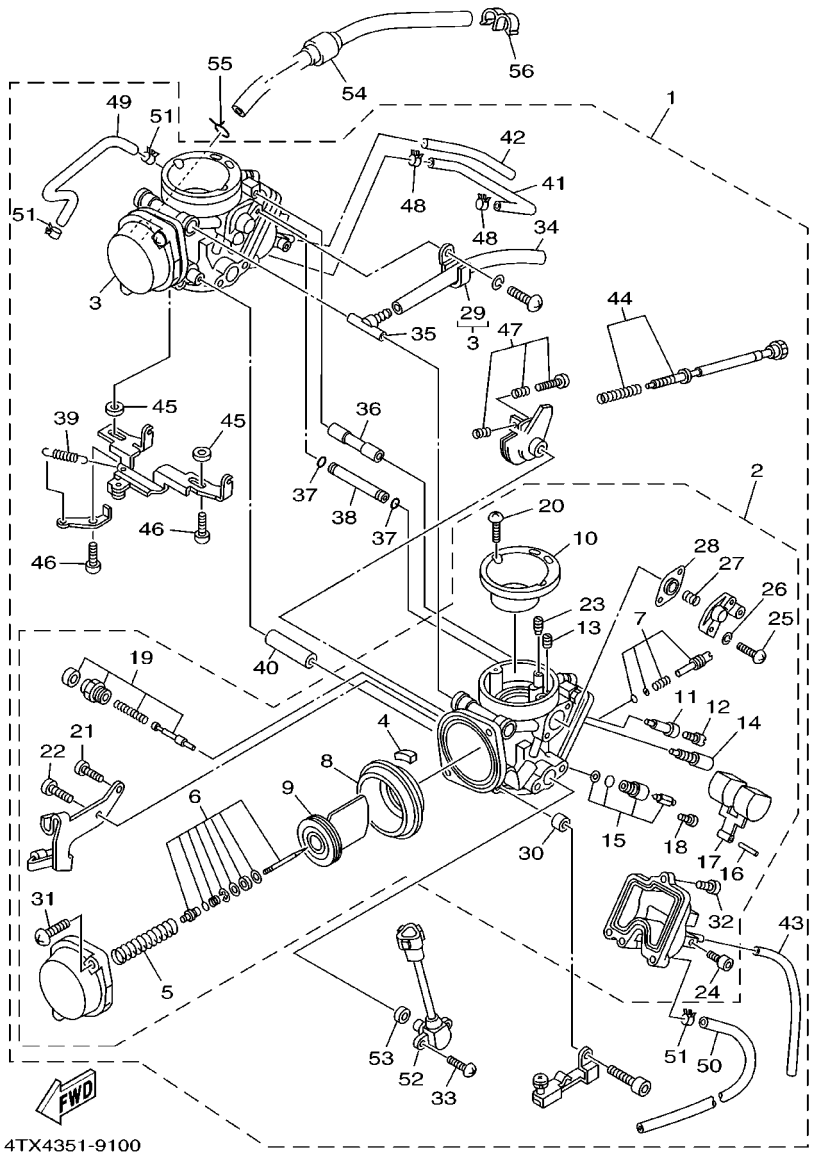

FIG. 10 CARBURETOR

REF. NO.	PART NO.	DESCRIPTION	4TX6	4TX7				REMARKS
27	4XY–14589–00	..SPRING	1	1				
28	5AP–14940–00	..DIAPHRAGM ASSY	1	1				
29	90461–06087	..CLAMP	1	1				
30	4TX–14264–00	..COLLAR	1	1				
31	4KM–14216–00	..SCREW	2	2				
32	98507–05012	..SCREW, PAN HEAD	3	3				
33	4WM–14565–00	.SCREW	2	2				
34	4TX–14348–00	.PIPE 1	1	1				
35	4SV–14987–00	.HOSE	1	1				
36	4TX–14148–10	.PIPE	1	1				
37	36Y–14147–00	.O–RING	2	2				
38	4TX–14419–00	.PIPE	1	1				
39	4SV–14935–00	.SPRING	1	1				
40	4TX–14148–00	.PIPE	1	1				
41	4TX–14349–00	.PIPE	1	1				
42	3JE–14197–00	.PIPE	1	1				
43	3JD–14197–00	.PIPE	1	1				
44	4TX–14103–40	.THROTTLE SCREW SET	1	1				
45	4NK–14327–00	.PACKING	2	2				
46	4XV–24453–00	.SCREW	2	2				
47	3EN–1490K–00	.STOP SCREW SET	1	1				
48	5DM–14919–00	.CLIP	2	2				
49	4TX–1243A–40	.HOSE 1	1	1				
50	4TX–1243F–40	.HOSE,3	1	1				
51	90467–09037	.CLIP	3	3				
52	4TX–85885–00	.THROTTLE SENSOR ASSY	1	1				
53	4HM–14239–00	.SEAL	1	1				

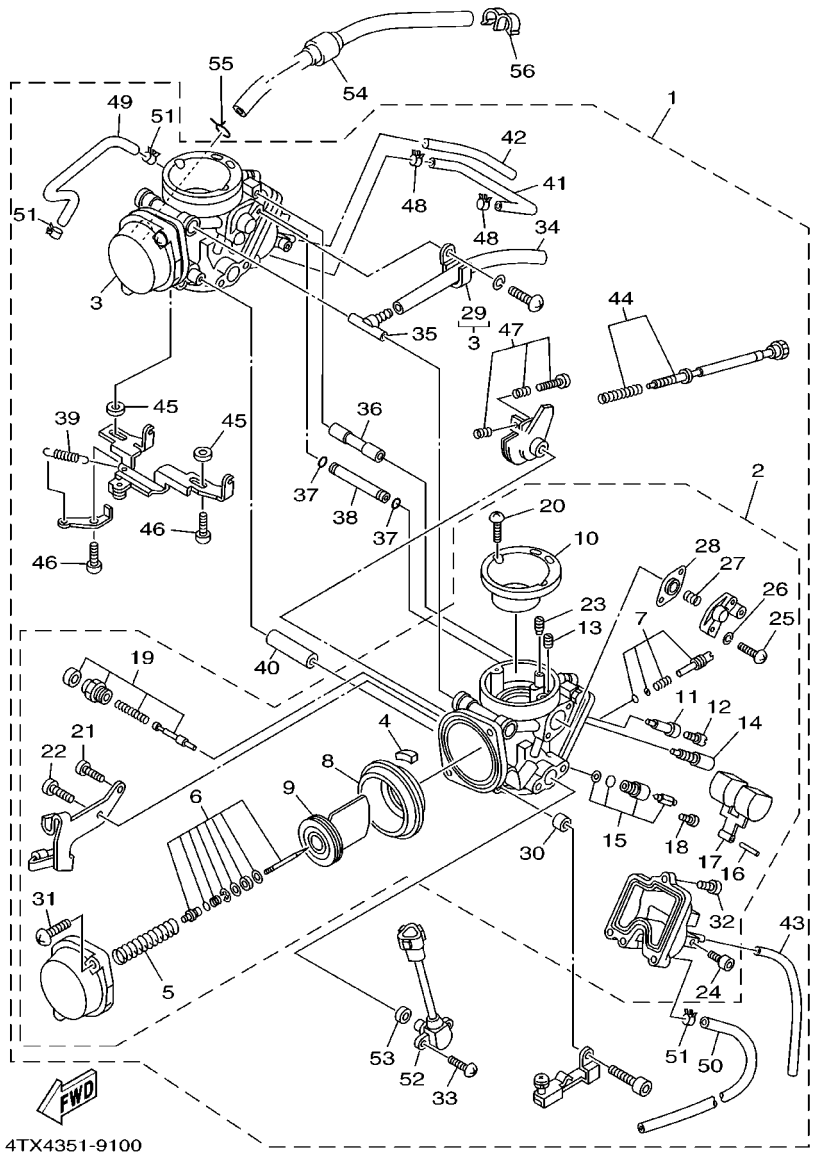

FIG. 10 CARBURETOR

REF. NO.	PART NO.	DESCRIPTION	4TX6	4TX7				REMARKS
54	4TX–14148–40	PIPE	2	2				
55	90467–15012	CLIP	2	2				
56	90464–12238	CLAMP	1	1				

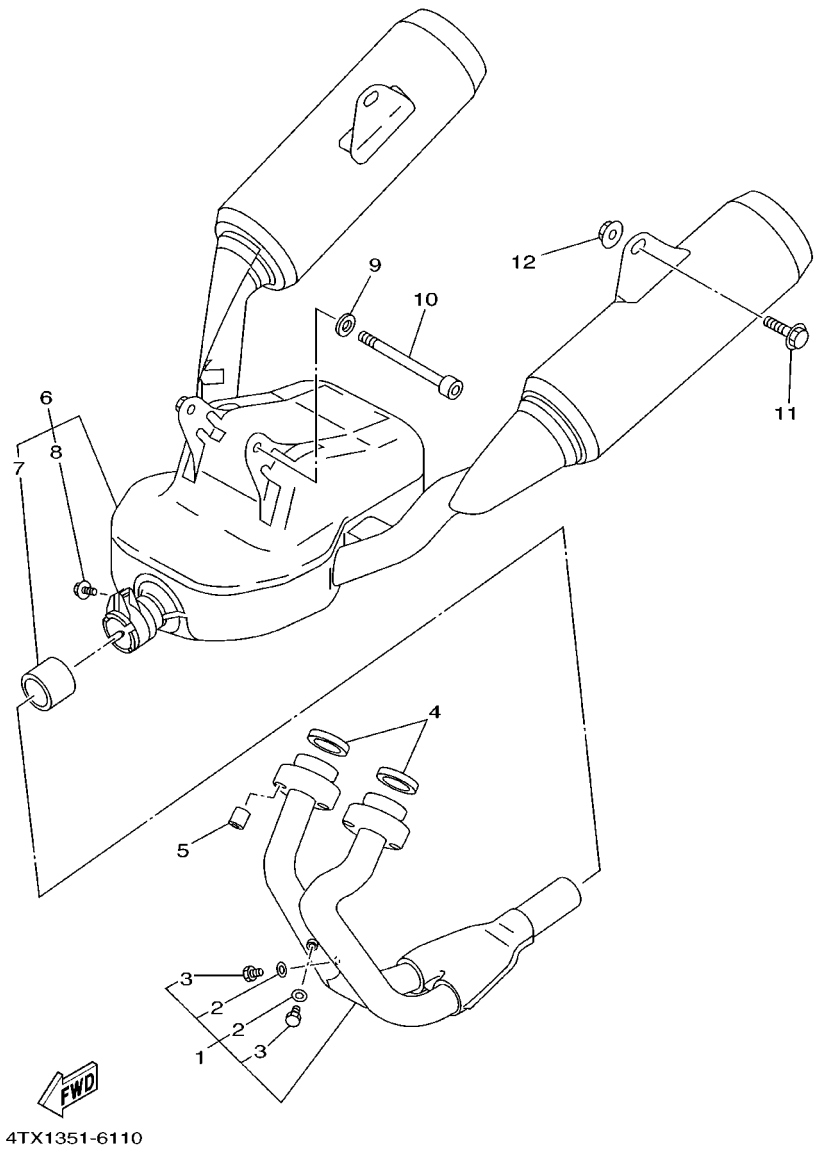

FIG. 11 EXHAUST

REF. NO.	PART NO.	DESCRIPTION	4TX6	4TX7				REMARKS
1	4TX–14602–01	EXHAUST PIPE COMP.	1	1				
2	92990–06600	.WASHER, PLATE	2	2				
3	90101–06576	.BOLT	2	2				
4	3VD–14613–00	GASKET, EXHAUST PIPE	2	2				
5	90179–08345	NUT	4	4				
6	4TX–14710–41	MUFFLER ASSY 1	1	1				
7	3VD–14755–00	.GASKET, SILENCER	1	1				
8	95027–08025	.BOLT, FLANGE	1	1				
9	90201–08326	WASHER, PLATE	1	1				
10	91317–08110	BOLT	1	1				
11	90105–10271	BOLT, WASHER BASED	2	2				
12	95707–10500	NUT, FLANGE	2	2				

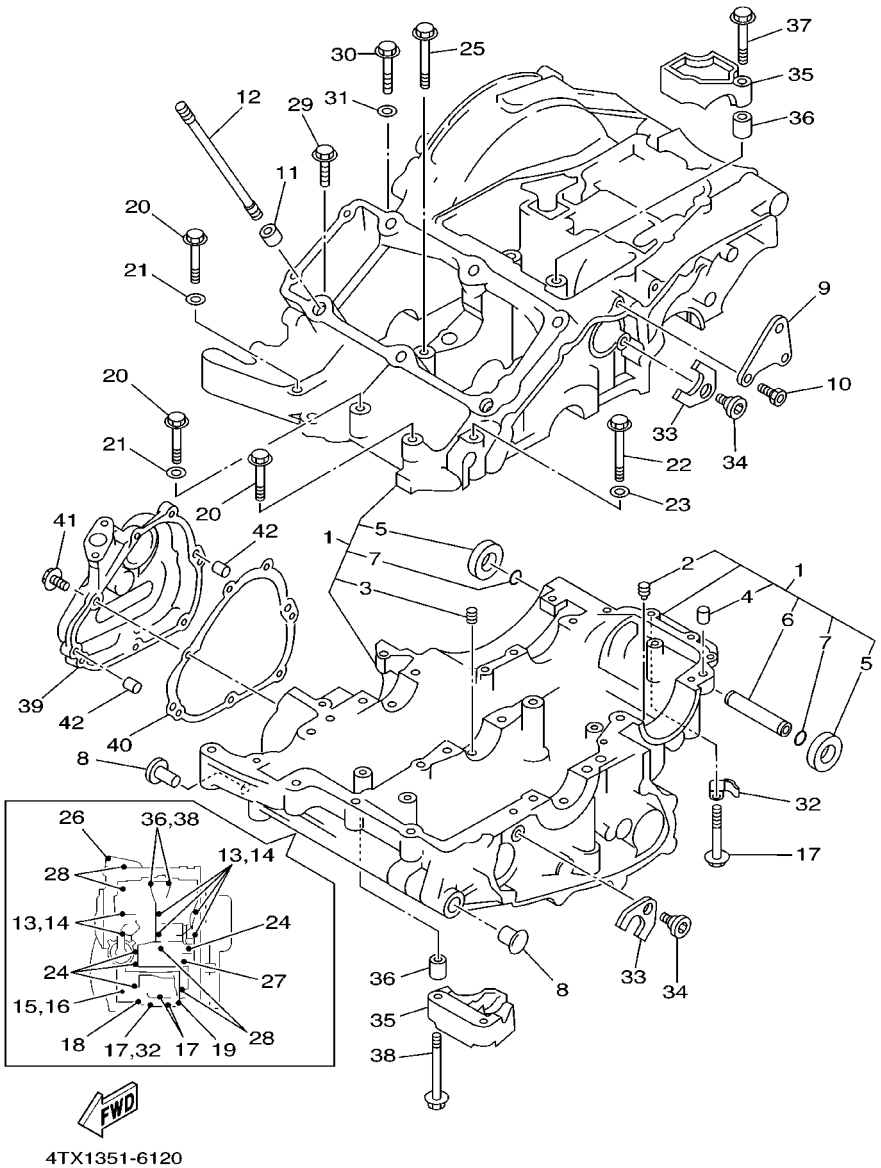

FIG. 12 CRANKCASE

REF. NO.	PART NO.	DESCRIPTION	4TX6	4TX7				REMARKS
1	3VD–15100–23	CRANKCASE ASSY	1	1				
2	2H7–15138–00	.NOZZLE 1	1	1				
3	4G0–15138–00	.NOZZLE 1	1	1				
4	99530–10114	.PIN, DOWEL	1	1				
5	3VD–15316–00	.DAMPER, ENGINE MOUNT 1	2	2				
6	3VD–15317–00	.SPACER, ENGINE MOUNT	1	1				
7	93210–12095	.O–RING	2	2				
8	90338–11257	PLUG	2	2				
9	3VD–15199–00	BRACKET	1	1				
10	91314–08016	BOLT	2	2				
11	99530–14016	PIN, DOWEL	2	2				
12	3LD–11361–00	BOLT, CYLINDER HOLDING 1	6	6				
13	90105–10560	BOLT, WASHER BASED	6	6				
14	90201–11597	WASHER, PLATE	6	6				
15	95814–06040	BOLT, FLANGE	1	1				
16	90201–066F0	WASHER, PLATE	1	1				
17	95817–06055	BOLT, FLANGE	3	3				
18	95817–06020	BOLT, FLANGE	1	1				
19	95817–06030	BOLT, FLANGE	1	1				
20	95814–08050	BOLT, FLANGE	3	3				
21	90201–08087	WASHER, PLATE	2	2				
22	95814–08060	BOLT, FLANGE	1	1				
23	90201–08087	WASHER, PLATE	1	1				
24	95817–06070	BOLT, FLANGE	4	4				
25	95817–08065	BOLT, FLANGE	1	1				
26	95814–08050	BOLT, FLANGE	1	1				
27	95817–08070	BOLT, FLANGE	1	1				

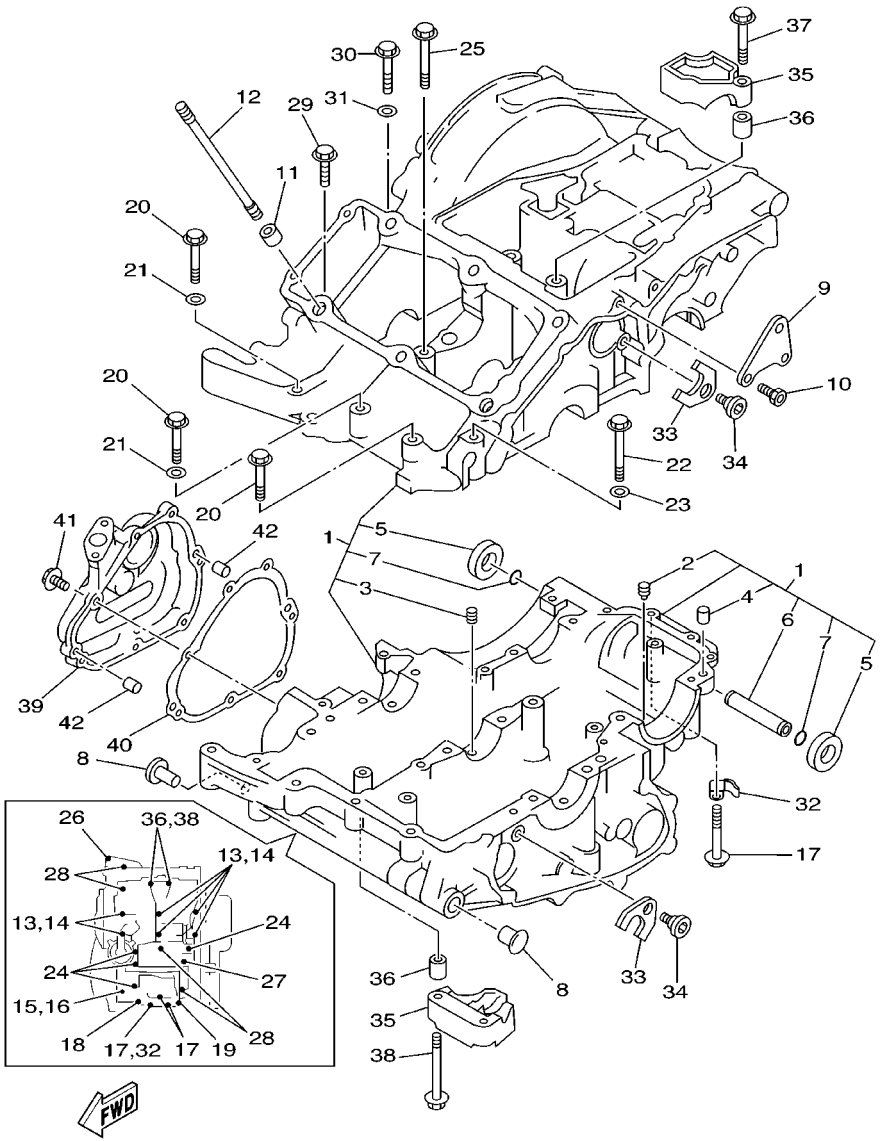

FIG. 12 CRANKCASE

REF. NO.	PART NO.	DESCRIPTION	4TX6	4TX7				REMARKS
28	95817–08075	BOLT, FLANGE	4	4				
29	95817–06025	BOLT, FLANGE	1	1				
30	95814–06040	BOLT, FLANGE	1	1				
31	90201–066F0	WASHER, PLATE	1	1				
32	90465–08341	CLAMP	1	1				
33	3LD–15191–00	PLATE	2	2				
34	90149–06285	SCREW	2	2				
35	3LD–15118–00	HOLDER	2	2				
36	99530–08016	PIN, DOWEL	4	4				
37	95817–06045	BOLT, FLANGE	2	2				
38	95817–06070	BOLT, FLANGE	2	2				
39	3VD–15416–10	COVER, OIL PUMP	1	1				
40	3VD–15456–00	GASKET, OIL PUMP COVER 1	1	1				
41	95024–06020	BOLT, FLANGE	7	7				
42	99530–08012	PIN, DOWEL	2	2				

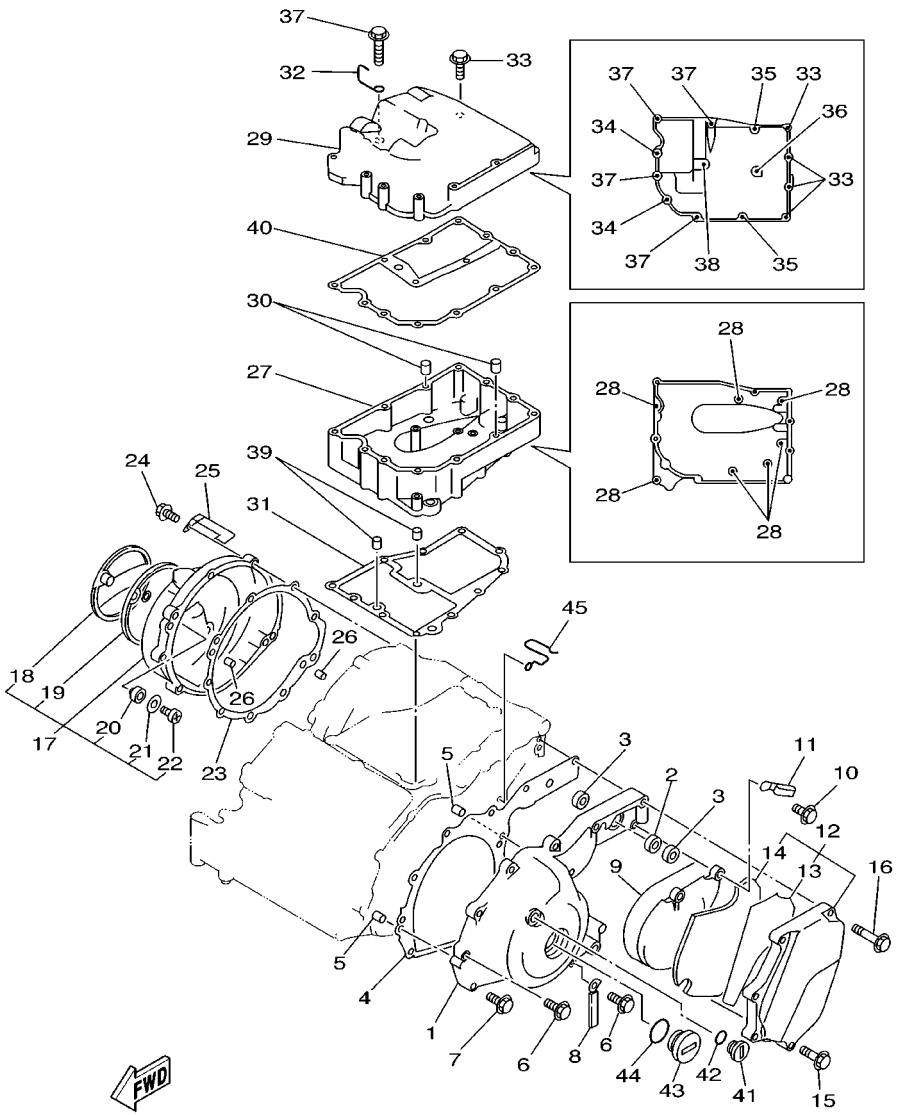

FIG. 13 CRANKCASE COVER 1

REF. NO.	PART NO.	DESCRIPTION	4TX6	4TX7				REMARKS
1	3VD–15411–11	COVER, CRANKCASE 1	1	1				
2	93317–21236	BEARING	1	1				
3	93109–12075	OIL SEAL	2	2				
4	3VD–15451–00	GASKET, CRANKCASE COVER 1	1	1				
5	99530–08012	PIN, DOWEL	2	2				
6	95024–06025	BOLT, FLANGE	8	8				
7	90105–06456	BOLT, WASHER BASED	1	1				
8	90465–08127	CLAMP	1	1				
9	3LD–15418–00	COVER, CHAIN CASE	1	1				
10	95027–06025	BOLT, FLANGE	2	2				
11	90465–08122	CLAMP	1	1				
12	3VD–15420–01	CRANKCASE COVER ASSY 2	1	1				
13	3VD–15326–00	.DAMPER, ENGINE MOUNT 2	1	1				
14	3VD–15335–00	.DAMPER 3	1	1				
15	95024–06030	BOLT, FLANGE	1	1				
16	95024–06055	BOLT, FLANGE	4	4				
17	4UN–15430–00	CRANKCASE COVER ASSY 3	1	1				
18	3VD–15417–01	.COVER, CAP	1	1				
19	3LD–15449–00	.RING, RUBBER	1	1				
20	1JK–15486–00	.GROMMET	2	2				
21	90209–05279	.WASHER	2	2				
22	98507–05010	.SCREW, PAN HEAD	2	2				
23	4NX–15462–01	GASKET, CRANKCASE COVER 3	1	1				
24	95024–06025	BOLT, FLANGE	9	9				
25	90465–15384	CLAMP	1	1				
26	99530–08012	PIN, DOWEL	2	2				
27	4UN–15425–01	COVER, GENERATOR 2	1	1				

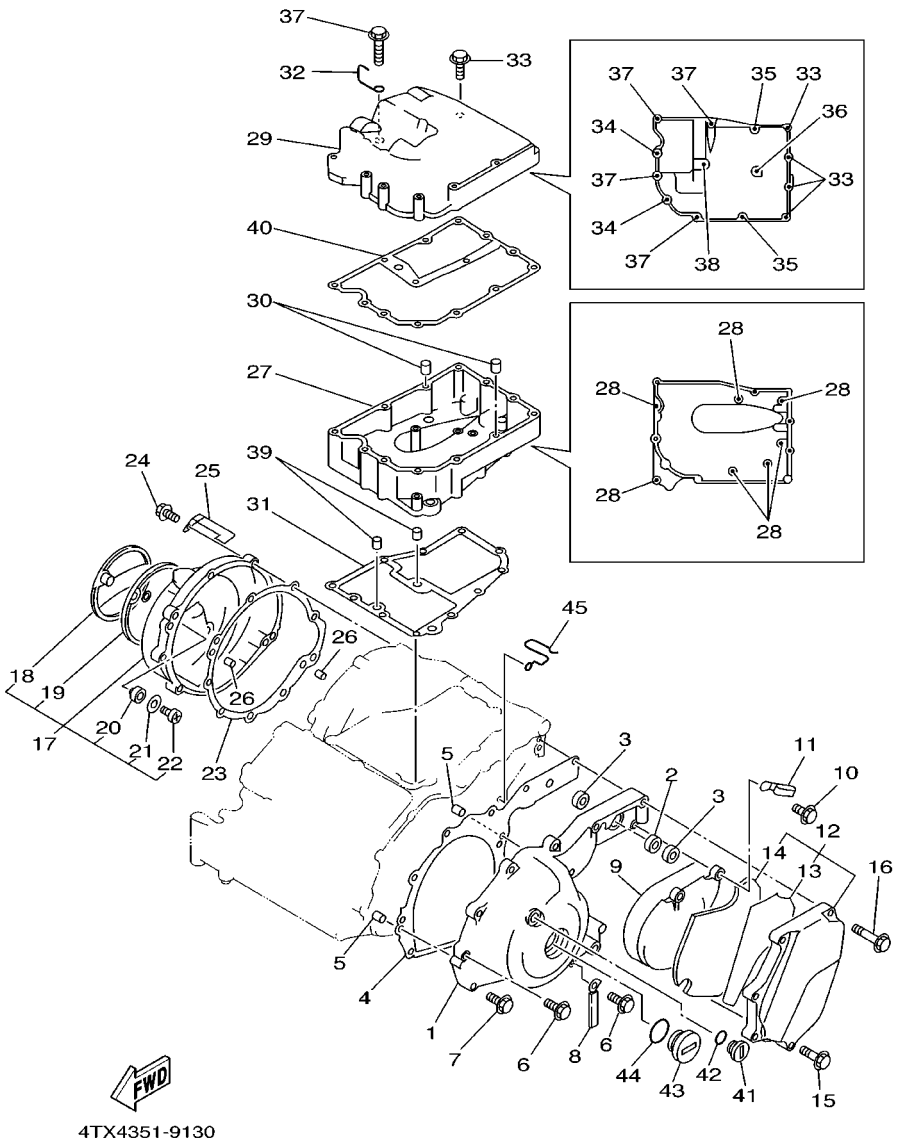

FIG. 13 CRANKCASE COVER 1

REF. NO.	PART NO.	DESCRIPTION	4TX6	4TX7				REMARKS
28	95027–06035	BOLT, FLANGE	7	7				
29	4UN–15426–00	COVER, OIL PUMP 2	1	1				
30	99530–08012	PIN, DOWEL	2	2				
31	3VD–15463–00	GASKET, CARBURETOR COVER 2	1	1				
32	90462–20223	CLAMP	1	1				
33	95024–06035	BOLT, FLANGE	4	4				
34	95024–06045	BOLT, FLANGE	2	2				
35	95024–06055	BOLT, FLANGE	2	2				
36	90105–06131	BOLT, WASHER BASED	1	1				
37	95024–06110	BOLT, FLANGE	4	4				
38	95817–06090	BOLT, FLANGE	1	1				
39	99530–10114	PIN, DOWEL	2	2				
40	4NX–15461–00	GASKET, CRANKCASE COVER 2	1	1				
41	90340–14151	PLUG, STRAIGHT SCREW	1	1				
42	93210–14369	O–RING	1	1				
43	90340–32116	PLUG, STRAIGHT SCREW	1	1				
44	93210–32172	O–RING	1	1				
45	90465–20342	CLAMP	1	1				

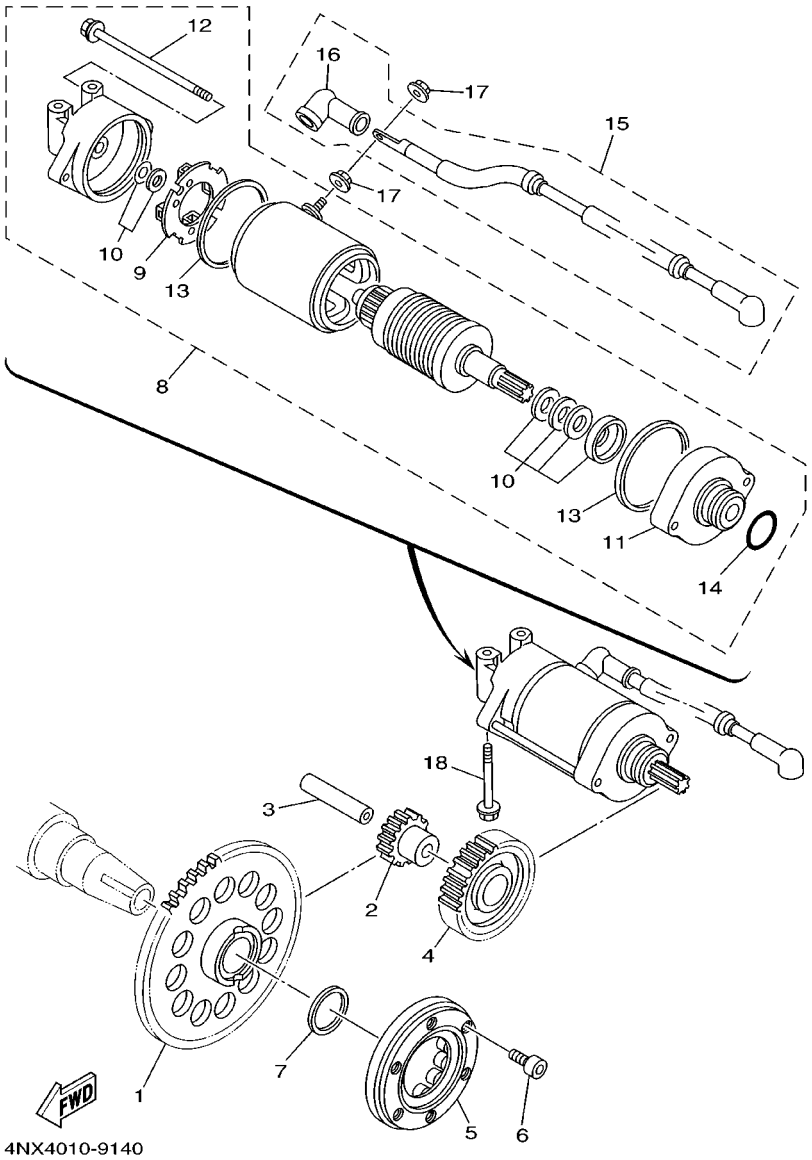

FIG. 14 STARTER CLUTCH

REF. NO.	PART NO.	DESCRIPTION	4TX6	4TX7				REMARKS
1	4NX–15515–00	GEAR 3	1	1				
2	3LD–15517–00	GEAR, IDLER 2	1	1				
3	26H–15521–00	SHAFT 1	1	1				
4	3LD–15512–00	GEAR, IDLER 1	1	1				
5	3LD–15590–02	STARTER ONE–WAY ASSY	1	1				
6	91317–06018	BOLT	3	3				
7	90201–301P3	WASHER, PLATE	1	1				
8	3LD–81890–00	MOTOR ASSY	1	1				
9	3AJ–81801–00	.BRUSH SET	1	1				
10	3AJ–81809–00	.WASHER KIT	1	1				
11	3AJ–81830–00	.FRONT BRACKET ASSY	1	1				
12	3AJ–81826–00	.BOLT	2	2				
13	11H–81844–00	.GASKET	2	2				
14	1FK–81847–00	.O–RING	1	1				
15	3LD–81815–01	CORD, STARTER MOTOR	1	1				
16	4G0–81871–00	.CAP	1	1				
17	4XV–8182A–00	NUT	2	2				
18	95817–06050	BOLT, FLANGE	2	2				

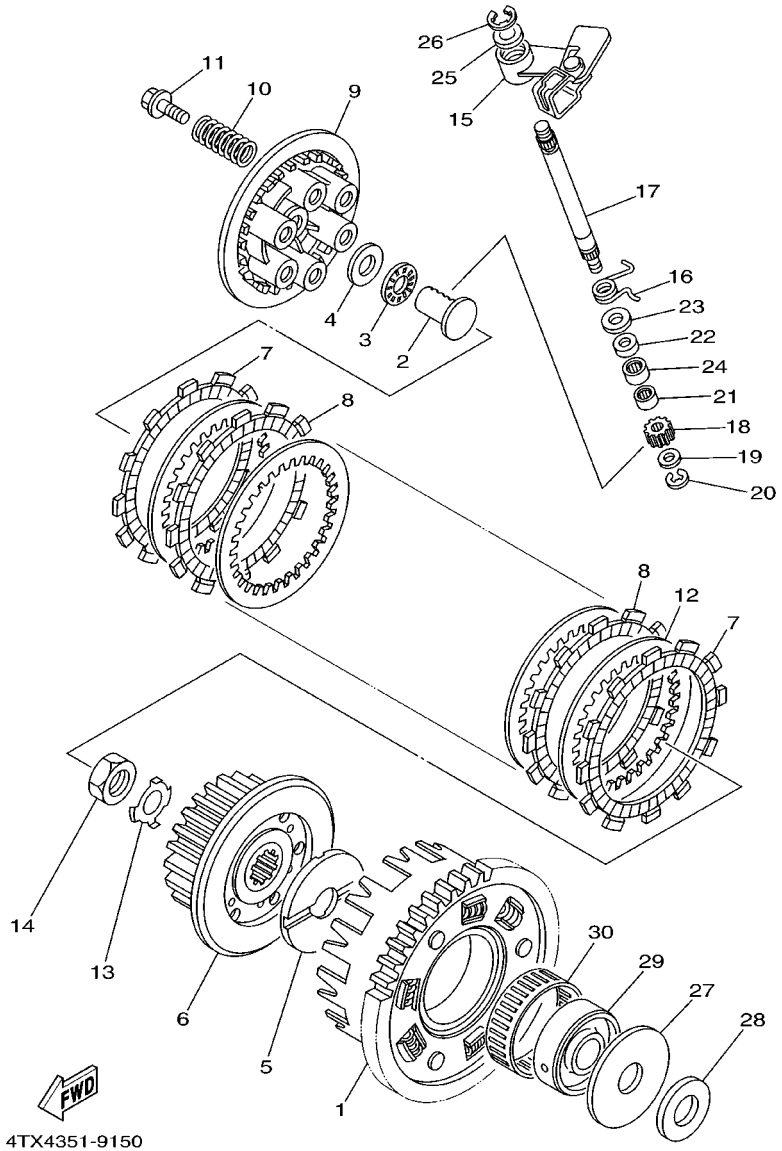

FIG. 15 CLUTCH

REF. NO.	PART NO.	DESCRIPTION	4TX6	4TX7				REMARKS
1	4TX–16150–01	PRIMARY DRIVEN GEAR COMP.	1	1				
2	3LD–1637A–01	ROD PUSH ASSY	1	1				
3	93340–21505	BEARING	1	1				
4	90201–150U6	WASHER, PLATE	1	1				
5	4H7–16154–00	PLATE, THRUST 1	1	1				
6	4TX–16371–00	BOSS, CLUTCH	1	1				
7	4H7–16321–02	PLATE, FRICTION	2	2				
8	4TX–16321–00	PLATE, FRICTION	7	7				
9	3LD–16351–00	PLATE, PRESSURE 1	1	1				
10	90501–237L0	SPRING, COMPRESSION	6	6				
11	90159–06123	SCREW, WITH WASHER	6	6				
12	3J2–16324–00	PLATE, CLUTCH 1	8	8				
13	90215–20231	WASHER, LOCK	1	1				
14	90170–20327	NUT	1	1				
15	4TX–16340–40	PUSH LEVER ASSY	1	1				
16	90508–167A3	SPRING, TORSION	1	1				
17	3LD–16382–00	AXLE, PUSH LEVER	1	1				
18	3LD–16398–00	PINION, RELEAS	1	1				
19	92907–08600	WASHER, PLATE	1	1				
20	99001–07600	CIRCLIP	1	1				
21	93317–11020	BEARING	1	1				
22	93102–12224	OIL SEAL	1	1				
23	90201–12163	WASHER, PLATE	1	1				
24	93315–11206	BEARING	1	1				
25	90201–10119	WASHER, PLATE	1	1				
26	99009–10400	CIRCLIP	1	1				
27	3VD–16164–00	PLATE, THRUST 2	1	1				

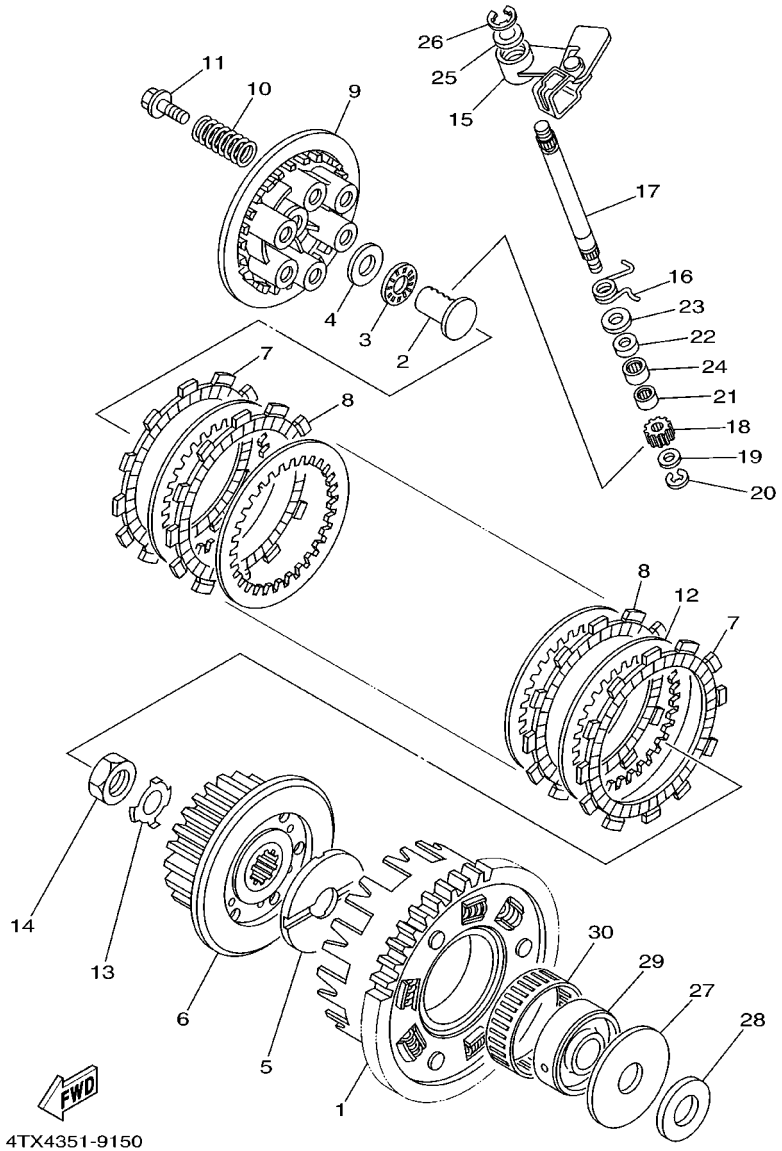

FIG. 15 CLUTCH

REF. NO.	PART NO.	DESCRIPTION	4TX6	4TX7				REMARKS
28	3VD–16154–00	PLATE, THRUST 1	1	1				
29	4NX–16181–00	SPACER 1	1	1				
30	93310–365B8	BEARING	1	1				

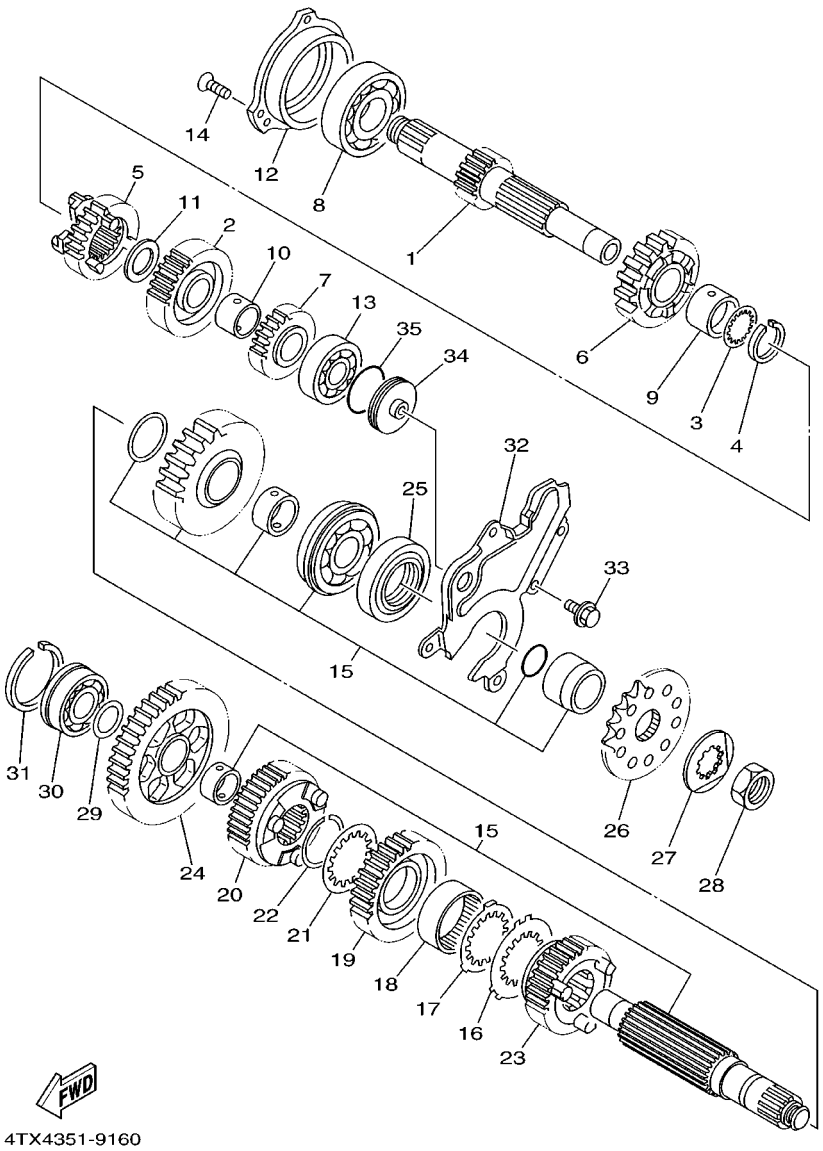

FIG. 16 TRANSMISSION

REF. NO.	PART NO.	DESCRIPTION	4TX6	4TX7				REMARKS
1	4TX–17411–40	AXLE, MAIN	1	1				
2	4TX–17151–40	GEAR, 5TH PINION (28T)	1	1				
3	90209–21332	WASHER	1	1				
4	93440–25084	CIRCLIP	1	1				
5	4TX–17131–40	GEAR, 3RD PINION(20T)	1	1				
6	2GH–17141–00	GEAR, 4TH PINION (23T)	1	1				
7	4TX–17121–40	GEAR, 2ND PINION (19T)	1	1				
8	93306–30525	BEARING (B6305)	1	1				
9	90387–253M6	COLLAR	1	1				
10	90387–203M7	COLLAR	1	1				
11	90201–200K3	WASHER, PLATE	1	1				
12	3LD–15163–10	HOUSING, BEARING 1	1	1				
13	93306–20464	BEARING	1	1				
14	90149–06286	SCREW	3	3				
15	4TX–17402–40	DRIVE AXLE ASSY	1	1				
16	90209–29329	WASHER	1	1				
17	90209–28330	WASHER	1	1				
18	90387–2802W	COLLAR	1	1				
19	4TX–17231–40	GEAR, 3RD WHEEL(30T)	1	1				
20	4NX–17241–00	GEAR, 4TH WHEEL(27T)	1	1				
21	90209–28331	WASHER	1	1				
22	93440–31172	CIRCLIP	1	1				
23	4TX–17251–40	GEAR, 5TH WHEEL(27T)	1	1				
24	4TX–17211–40	GEAR, 1ST WHEEL (37T)	1	1				
25	93102–35459	OIL SEAL	1	1				
26	9384E–16191	SPROCKET, DRIVE (16T)	1	1				
27	90215–21290	WASHER, LOCK	1	1				

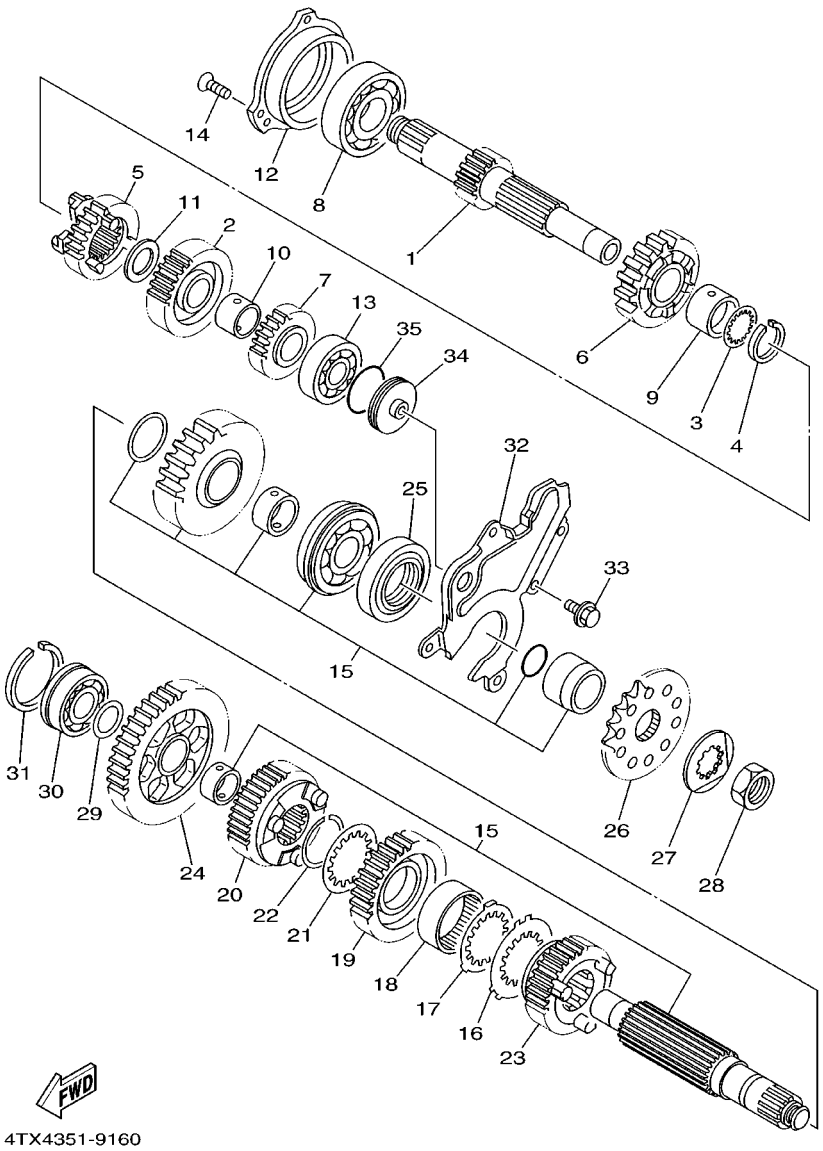

FIG. 16 TRANSMISSION

REF. NO.	PART NO.	DESCRIPTION	4TX6	4TX7				REMARKS
28	90179–18667	NUT	1	1				
29	90201–20278	WASHER, PLATE	1	1				
30	93306–20455	BEARING	1	1				
31	93440–45144	CIRCLIP	1	1				
32	4NX–17471–00	PLATE, COVER	1	1				
33	95827–06012	BOLT, FLANGE	5	5				
34	3LD–15414–00	COVER, AIR CLEANER	1	1				
35	93210–33133	O–RING	1	1				

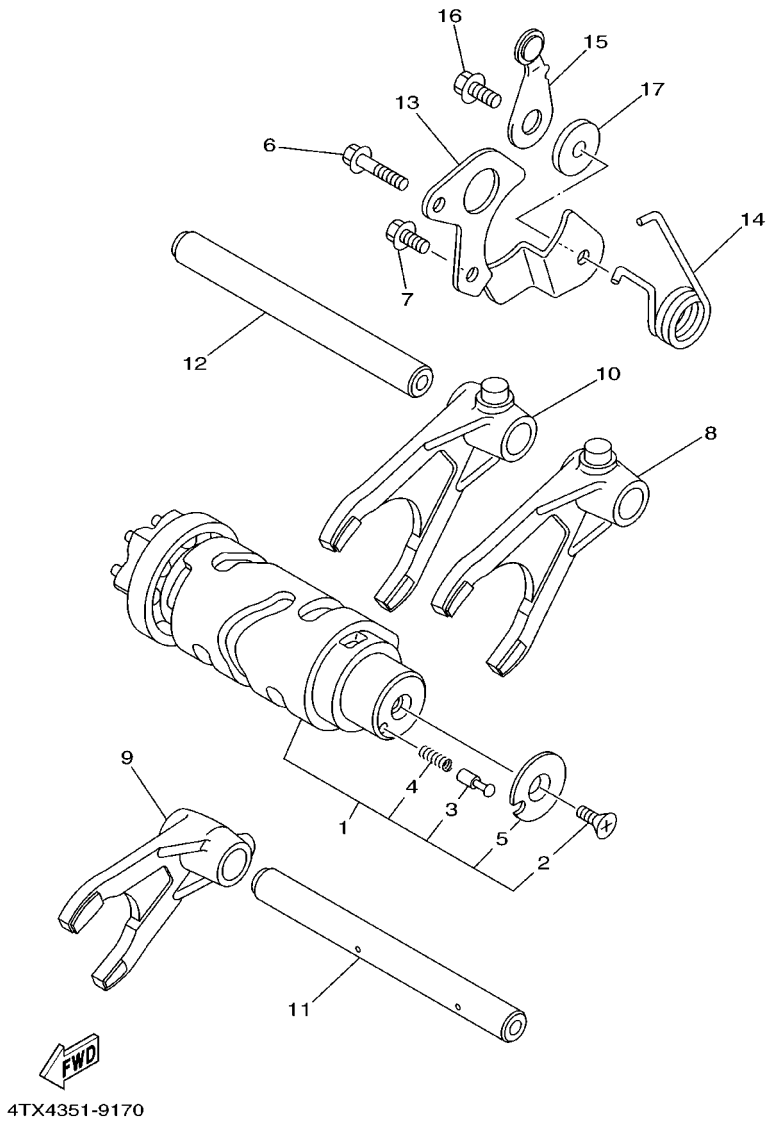

FIG. 17 SHIFT CAM. FORK

REF. NO.	PART NO.	DESCRIPTION	4TX6	4TX7				REMARKS
1	4TX–18540–40	SHIFT CAM ASSY	1	1				
2	90149–05321	.SCREW	1	1				
3	4UN–18542–00	.POINT, NEUTRAL	1	1				
4	90501–06022	.SPRING, COMPRESSION	1	1				
5	4UN–18566–00	.PLATE, SIDE 2	1	1				
6	90105–06597	BOLT, WASHER BASED	1	1				
7	90105–06397	BOLT, WASHER BASED	1	1				
8	3VD–18511–00	FORK, SHIFT 1	1	1				
9	3VD–18512–00	FORK, SHIFT 2	1	1				
10	3VD–18513–00	FORK, SHIFT 3	1	1				
11	4NX–18531–00	BAR, SHIFT FORK GUIDE 1	1	1				
12	4NX–18535–00	BAR, SHIFT FORK GUIDE 2	1	1				
13	3LD–18536–00	STOPPER, SHIFT BAR	1	1				
14	90508–297A4	SPRING, TORSION	1	1				
15	4SV–18140–00	STOPPER LEVER ASSY	1	1				
16	90105–06557	BOLT, WASHER BASED	1	1				
17	4NX–18175–00	SPACER	1	1				

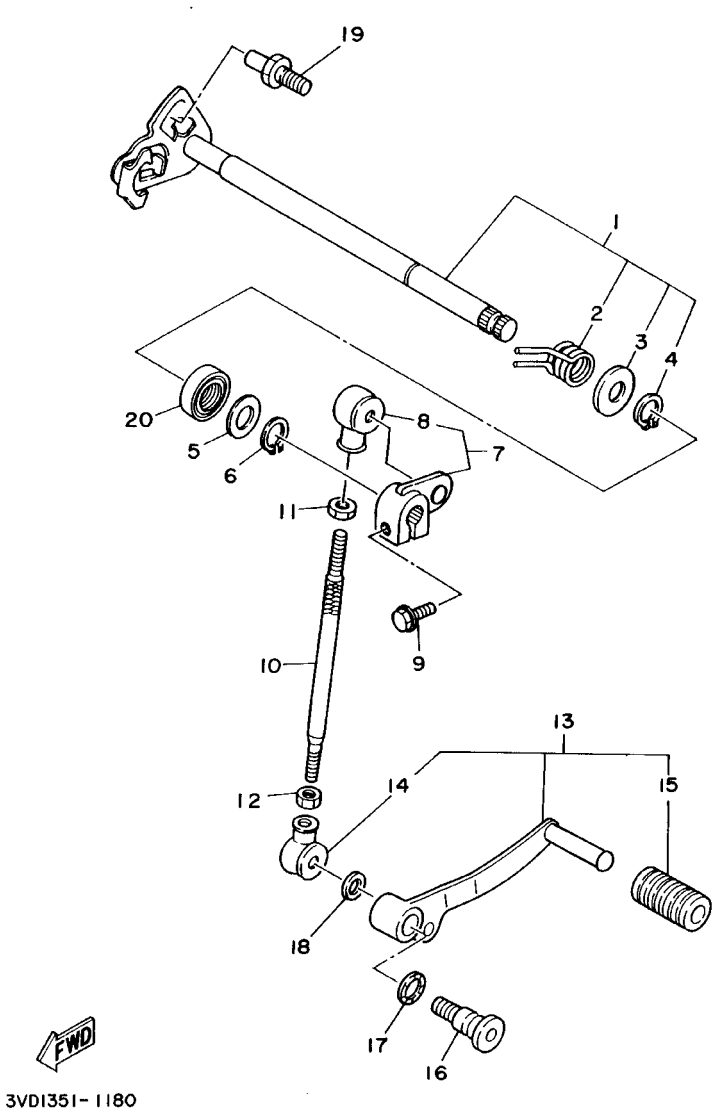

FIG. 18 SHIFT SHAFT

REF. NO.	PART NO.	DESCRIPTION	4TX6	4TX7				REMARKS
1	3LD–18101–02	SHIFT SHAFT ASSY	1	1				
2	90508–32682	.SPRING, TORSION	1	1				
3	90201–191J4	.WASHER, PLATE	1	1				
4	99009–19400	.CIRCLIP	1	1				
5	90201–12575	WASHER, PLATE	1	1				
6	99001–10600	CIRCLIP	1	1				
7	3LD–18130–00	SHIFT SHAFT ASSY	1	1				
8	2H9–18154–00	.COVER, DUST	1	1				
9	95827–06020	BOLT, FLANGE	1	1				
10	3VD–18115–00	ROD, SHIFT	1	1				
11	90170–06228	NUT(COUNTER CLOCKWISE)	1	1				
12	95304–06700	NUT	1	1				
13	3VD–18110–10	SHIFT PEDAL ASSY	1	1				
14	2H9–18154–00	.COVER, DUST	1	1				
15	132–18113–01	.COVER, SHIFT PEDAL	1	1				
16	2YK–27434–01	BOLT	1	1				
17	90206–12074	WASHER, WAVE	1	1				
18	90201–08326	WASHER, PLATE	1	1				
19	4G0–18127–00	STOPPER, SCREW	1	1				
20	93101–12004	OIL SEAL	1	1				

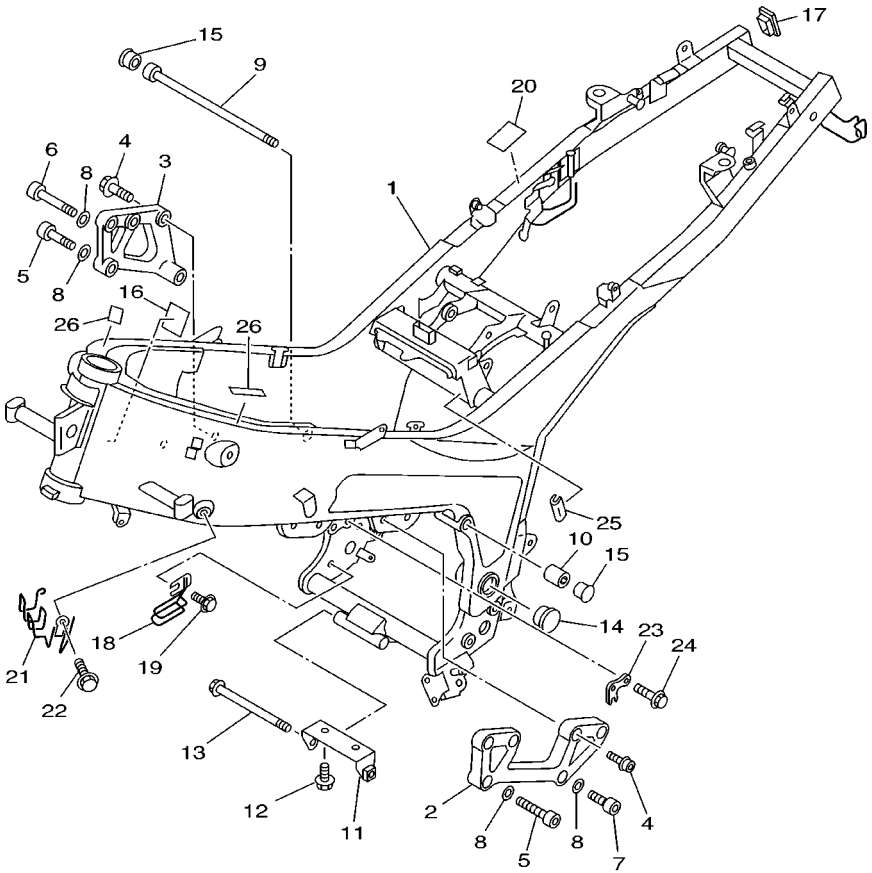

4TX4351-9190

FIG. 19 FRAME

REF. NO.	PART NO.	DESCRIPTION	4TX6	4TX7				REMARKS
1	4TX–21110–40–35	FRAME COMP.	1	1				SL
2	3VD–21411–10–35	BRACKET, ENGINE 1	1	1				SL
3	4TX–21419–00–35	BRACKET, ENGINE 2	1	1				SL
4	90109–083G1	BOLT	7	7				
5	91314–10045	BOLT	2	2				
6	91314–10060	BOLT	1	1				
7	91314–10025	BOLT	1	1				
8	90201–10430	WASHER, PLATE	4	4				
9	90110–10229	BOLT, HEXAGON SOCKET HEAD	1	1				
10	90179–10377	NUT	1	1				
11	3VD–21489–00	BRACKET, ENGINE LOWER	1	1				
12	90105–08752	BOLT, WASHER BASED	2	2				
13	90105–10328	BOLT, WASHER BASED	1	1				
14	4TX–2135F–01	COVER	2	2				
15	3LD–2143A–00	CAP	2	2				
16	11H–21747–00	DAMPER	1	1				
17	3VD–2143A–00	CAP	2	2				
18	3VD–21164–00	HOLDER, CABLE	1	1				
19	95807–06010	BOLT, FLANGE	1	1				
20	3YL–12232–00	DAMPER	1	1				
21	4TX–21161–00	HOLDER, CABLE	1	1				
22	90105–06446	BOLT, WASHER BASED	1	1				
23	4TX–2148U–40	BRACKET 1	1	1				
24	95024–06010	BOLT, FLANGE	2	2				
25	3YX–2171L–00	MOLE, SIDE COVER 1	1	1				
26	4KB–21268–00	SEAL	2	2				

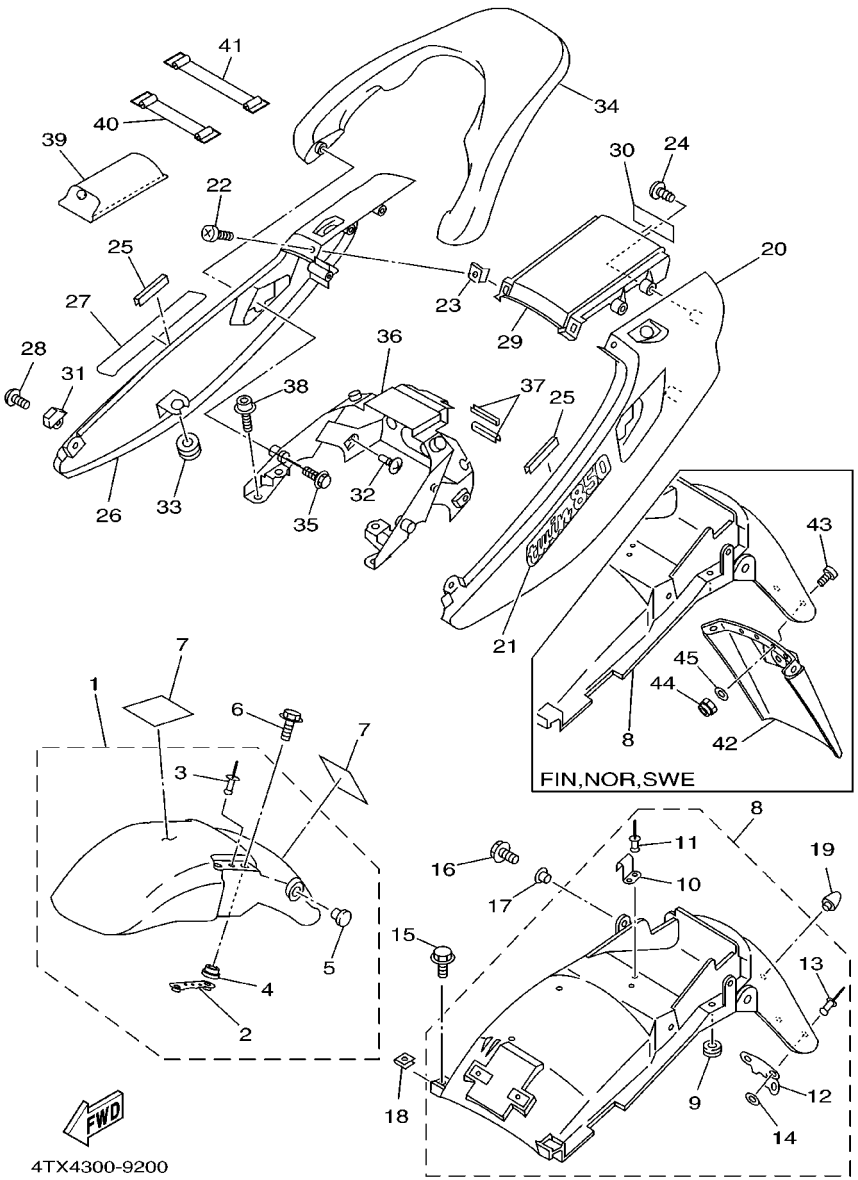

FIG. 20 FENDER

REF. NO.	PART NO.	DESCRIPTION	4TX6	4TX7				REMARKS
1	3VD–Y2151–10–7M	FRONT FENDER COMP.	1	1				UR MDS FOR BL2
	3VD–Y2151–10–P4	FRONT FENDER COMP.	1	1				UR NM3 FOR SM1
	3VD–Y2151–10–P9	FRONT FENDER COMP.	1	1				UR VRC7
2	3GM–21512–00	.BRACKET, FENDER	2	2				
3	90267–32071	.RIVET, BLIND	2	2				
4	90387–065T2	.COLLAR	4	4				
5	90338–12192	.PLUG	1	1				
6	90105–06477	BOLT, WASHER BASED	4	4				
7	3FY–21575–01	SEAL 1	2	2				
8	3VD–Y2161–01	REAR FENDER COMP.	1	1				UR
	3VD–Y2161–G0	REAR FENDER COMP.	1					UR FOR FIN,NOR,SWE
9	90480–10258	.GROMMET	2	2				
10	3VD–21366–00	.HOOK, TOOL BAND	1	1				
11	90267–40073	.RIVET, BLIND	2	2				
12	3HE–85132–01	.BRACKET, REFLECTOR 1	1	1				EXCEPT FOR FIN, NOR,SWE
13	90267–40035	.RIVET, BLIND	2	2				EXCEPT FOR FIN, NOR,SWE
14	90201–04018	.WASHER, PLATE	2	2				EXCEPT FOR FIN, NOR,SWE
15	95027–06010	BOLT, FLANGE	2	2				
16	95027–06020	BOLT, FLANGE	2	2				
17	90387–064J1	COLLAR	2	2				
18	90183–06023	NUT, SPRING	2	2				
19	2MG–21639–00	DAMPER 2	1	1				
20	4TX–2471K–00–4B	COVER, TAIL 1	1	1				UR BL2
	4TX–2471K–00–P5	COVER, TAIL 1	1	1				UR SM1
	4TX–2471K–00–P2	COVER, TAIL 1	1	1				UR VRC7
21	4TX–21781–A0	EMBLEM 1	1	1				UR FOR BL2
	4TX–21781–B0	EMBLEM 1	1	1				UR FOR SM1

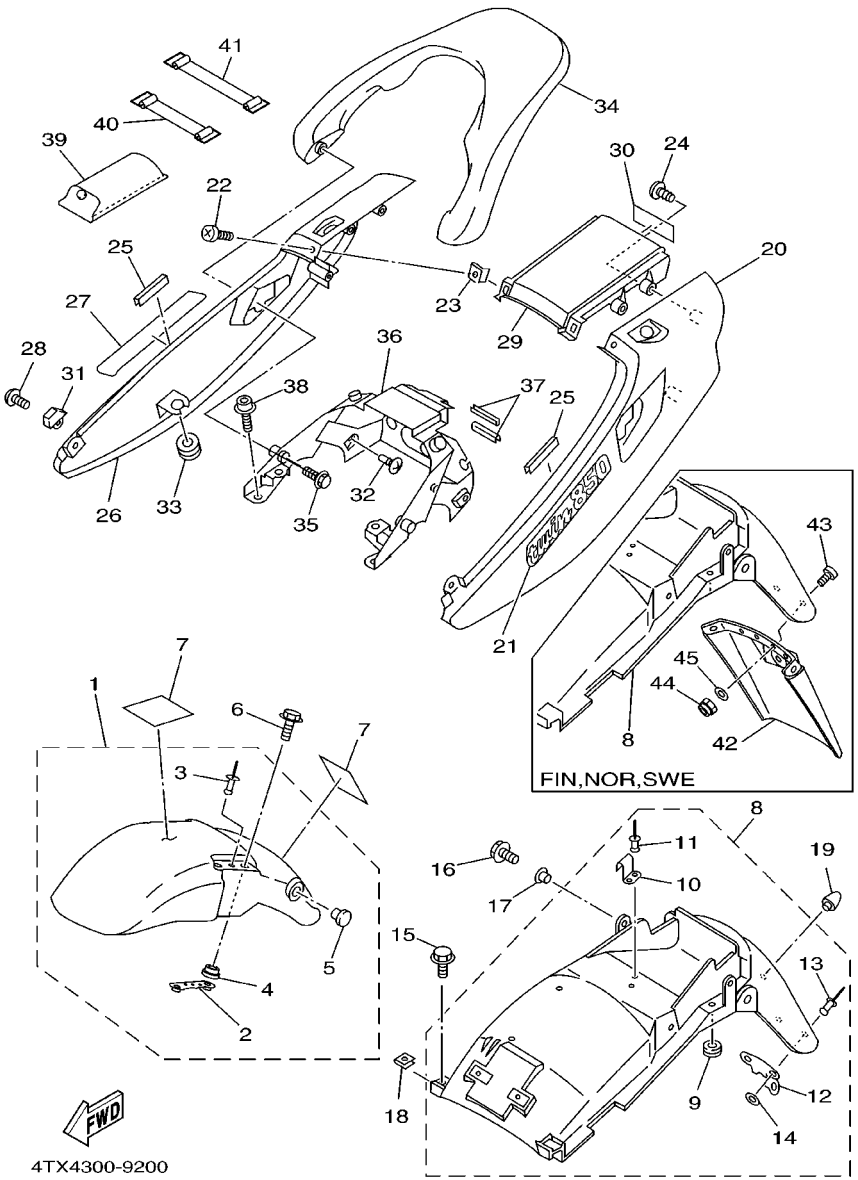

FIG. 20 FENDER

REF. NO.	PART NO.	DESCRIPTION	4TX6	4TX7				REMARKS
21	4TX–21781–80	EMBLEM 1	1	1				UR FOR VRC7
22	98907–05010	SCREW, BIND	2	2				
23	90183–05024	NUT, SPRING	2	2				
24	97707–50012	SCREW, TAPPING	4	4				
25	4KB–21268–00	SEAL	2	2				
26	4TX–2472K–00–4B	COVER, TAIL 2	1	1				UR BL2
	4TX–2472K–00–P5	COVER, TAIL 2	1	1				UR SM1
	4TX–2472K–00–P2	COVER, TAIL 2	1	1				UR VRC7
27	4TX–21781–A0	EMBLEM 1	1	1				UR FOR BL2
	4TX–21781–B0	EMBLEM 1	1	1				UR FOR SM1
	4TX–21781–80	EMBLEM 1	1	1				UR FOR VRC7
28	92017–06012	BOLT, BUTTON HEAD	2	2				
29	4TX–21651–00–4B	COVER, REAR FENDER	1	1				UR BL2
	4TX–21651–00–P5	COVER, REAR FENDER	1	1				UR SM1
	4TX–21651–00–P2	COVER, REAR FENDER	1	1				UR VRC7
30	99246–00080	EMBLEM, YAMAHA	1	1				UR BL2
	99247–00080	EMBLEM, YAMAHA	1	1				UR SM1
	99244–00080	EMBLEM, YAMAHA	1	1				UR VRC7
31	4TX–2161A–00	BRACKET 3	2	2				
32	97707–50012	SCREW, TAPPING	4	4				
33	90480–12550	GROMMET	2	2				
34	3VD–21645–00–4B	STAY, REAR	1	1				UR BL2
	3VD–21645–00–PA	STAY, REAR	1	1				UR SM1
	3VD–21645–00–P6	STAY, REAR	1	1				UR VRC7
35	95827–08040	BOLT, FLANGE	4	4				
36	4TX–2117E–00	BRACKET, TAILLIGHT	1	1				
37	46X–21269–00	SEAL	2	2				

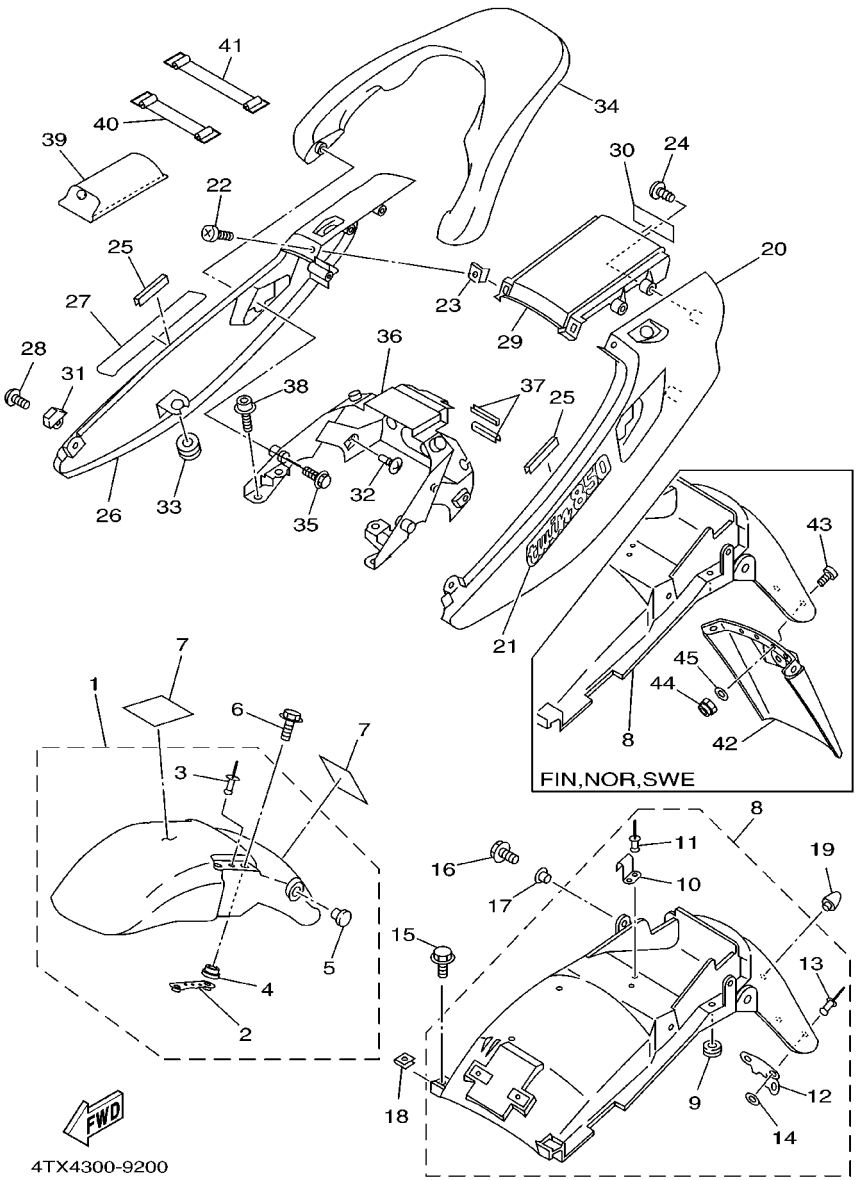

FIG. 20 FENDER

REF. NO.	PART NO.	DESCRIPTION	4TX6	4TX7				REMARKS
38	90109–085E2	BOLT	4	4				
39	4TX–28100–00	TOOL KIT	1	1				
40	116–82131–00	BAND, BATTERY	1	1				
41	133–82131–00	BAND, BATTERY	1	1				
42	3LD–21621–01	FLAP	1					
43	90149–04278	SCREW	4					FOR FIN,NOR,SWE
44	95607–04100	NUT, U	4					FOR FIN,NOR,SWE
45	90201–047A2	WASHER, PLATE	4					FOR FIN,NOR.SWE

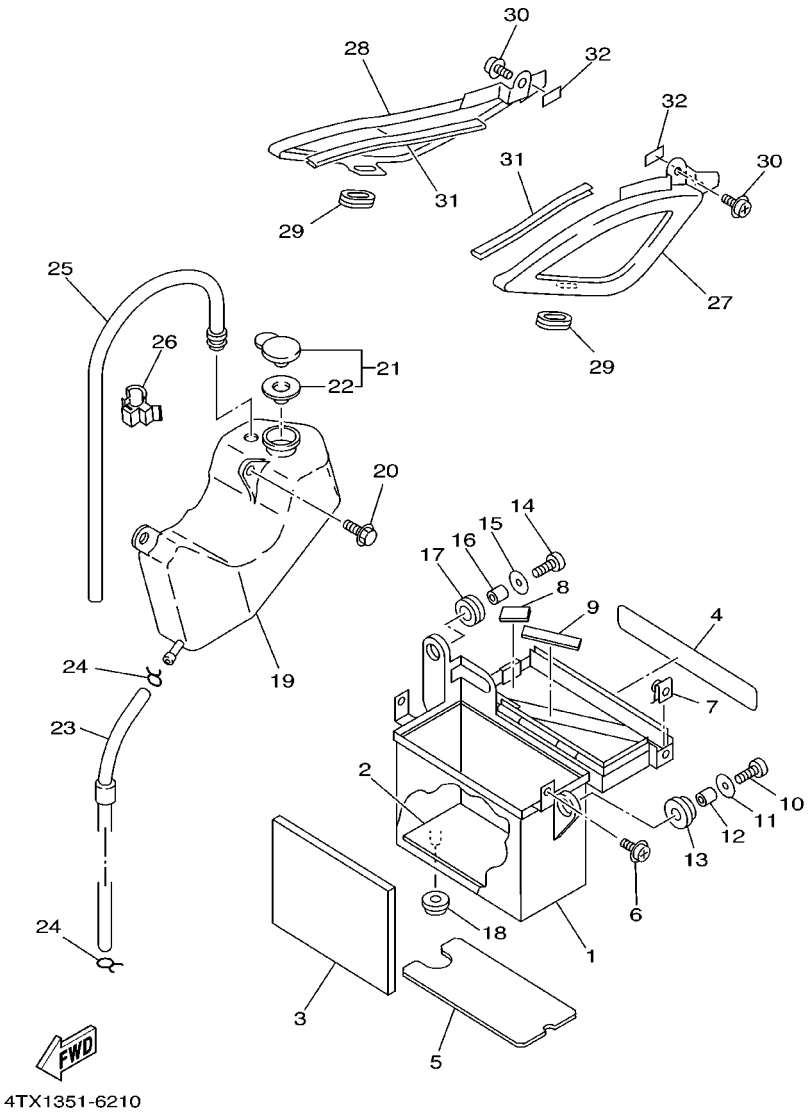

FIG. 21 SIDE COVER

REF. NO.	PART NO.	DESCRIPTION	4TX6	4TX7				REMARKS
1	4TX–2177G–00	BOX, BATTERY	1	1				
2	3Y6–21747–00	DAMPER	1	1				
3	4TX–21732–00	SEAL 1	1	1				
4	4TX–21735–00	SEAL 2	1	1				
5	4TX–2173M–00	SEAL 3	1	1				
6	90159–06093	SCREW, WITH WASHER	2	2				
7	90183–06053	NUT, SPRING	2	2				
8	51Y–21639–00	DAMPER 2	1	1				
9	50M–21638–00	DAMPER 1	1	1				
10	91317–06025	BOLT	1	1				
11	90201–06071	WASHER, PLATE	1	1				
12	90560–07007	SPACER	1	1				
13	90480–16404	GROMMET	1	1				
14	91317–06025	BOLT	1	1				
15	90201–06071	WASHER, PLATE	1	1				
16	90387–07674	COLLAR	1	1				
17	90480–16233	GROMMET	1	1				
18	90480–13369	GROMMET	1	1				
19	3VD–21871–00	TANK, RECOVERY	1	1				
20	90119–06056	BOLT, WITH WASHER	2	2				
21	1AA–21815–00	CAP	1	1				
22	1AA–21874–00	.GASKET	1	1				
23	90445–086J6	HOSE	1	1				
24	90467–08075	CLIP	2	2				
25	3VD–21816–00	PIPE 1	1	1				
26	90464–10190	CLAMP	1	1				
27	4TX–21711–00	COVER, SIDE 1	1	1				

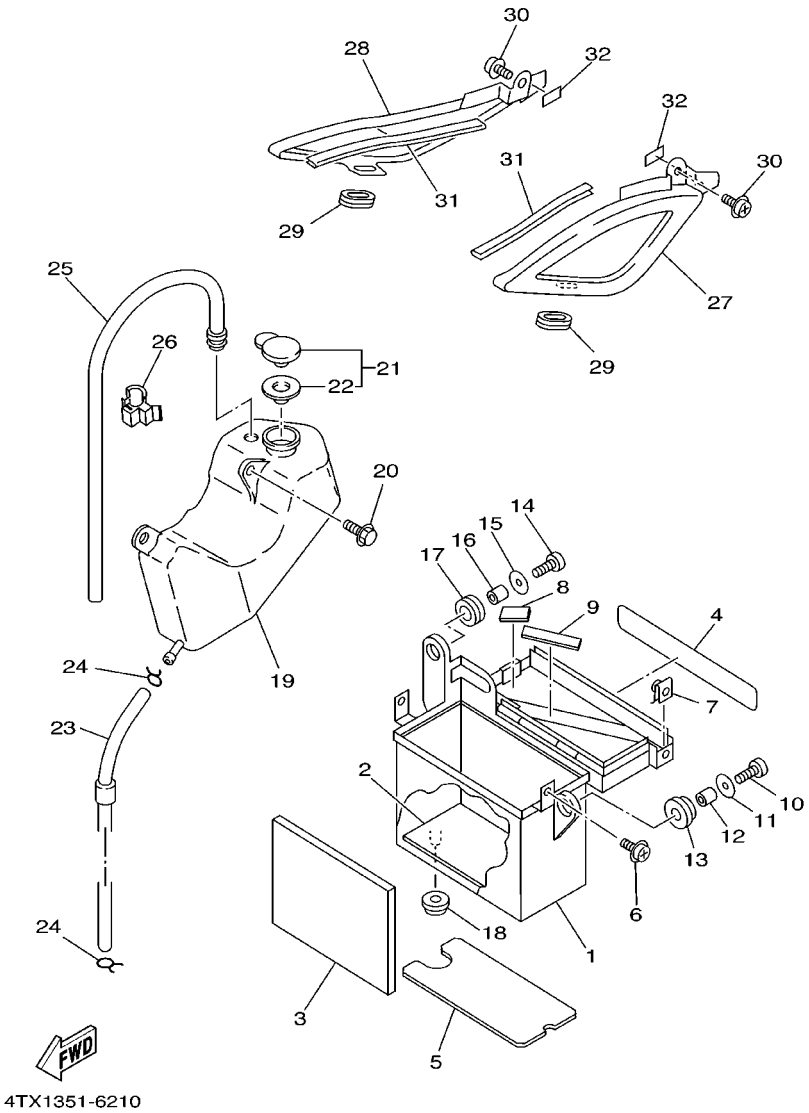

FIG. 21 SIDE COVER

REF. NO.	PART NO.	DESCRIPTION	4TX6	4TX7				REMARKS
28	4TX–21721–00	COVER, SIDE 2	1	1				
29	90480–01603	GROMMET	2	2				
30	90159–06059	SCREW, WITH WASHER	2	2				
31	4TX–21652–01	PROTECTOR	2	2				
32	51Y–21639–00	DAMPER 2	4	4				

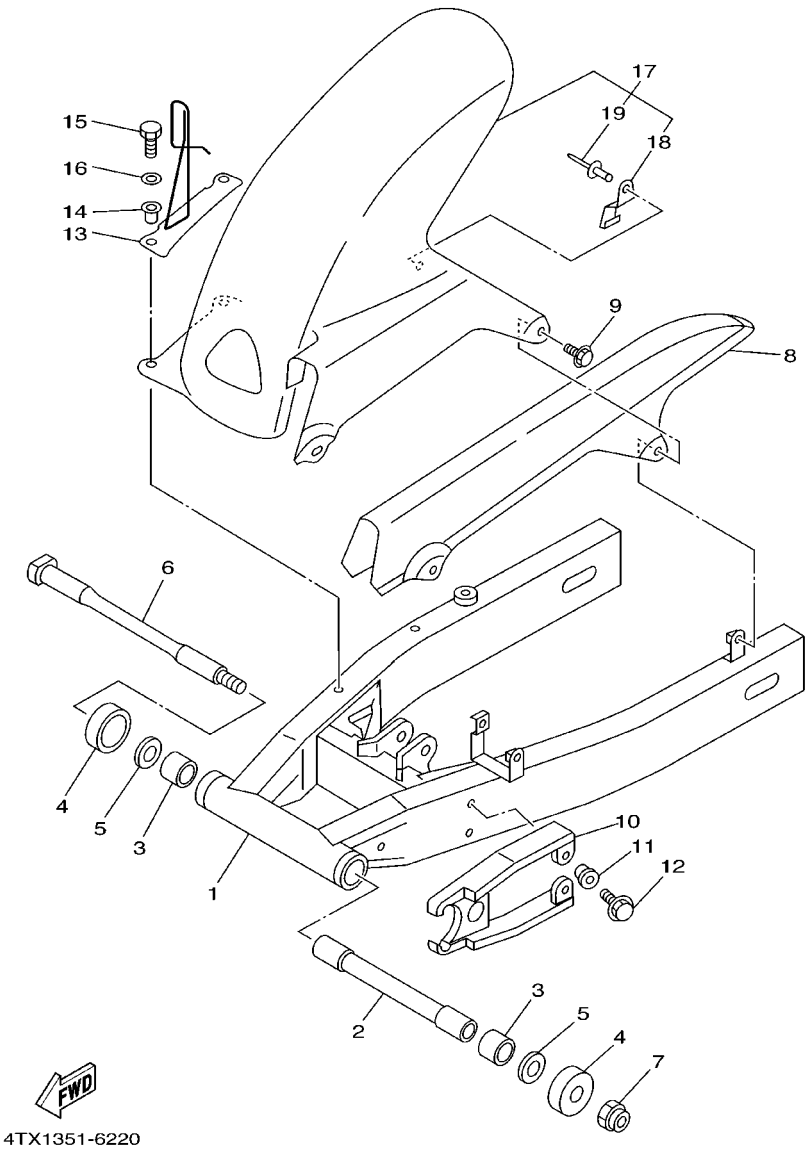

FIG. 22 REAR ARM

REF. NO.	PART NO.	DESCRIPTION	4TX6	4TX7				REMARKS
1	4TX–22110–00	REAR ARM COMP.	1	1				
2	33M–22184–00	BUSH	1	1				
3	93320–32403	BEARING	2	2				
4	4X7–22129–00	COVER, THRUST 2	2	2				
5	90201–161J3	WASHER, PLATE	2	2				
6	46X–22141–00	SHAFT, PIVOT	1	1				
7	90185–14112	NUT, SELF–LOCKING	1	1				
8	3VD–22311–00	CASE, CHAIN	1	1				
9	90119–06044	BOLT, WITH WASHER	2	2				
10	3VD–22151–00	SEAL, GUARD	1	1				
11	90387–06681	COLLAR	3	3				
12	90119–06108	BOLT, WITH WASHER	3	3				
13	3VD–25875–01	HOLDER, BRAKE HOSE 1	1	1				
14	90387–064J1	COLLAR	2	2				
15	97007–06025	BOLT	2	2				
16	92907–06600	WASHER, PLATE	2	2				
17	3VD–W2165–00	FENDER COMP, REAR TIRE	1	1				
18	3VD–2164F–00	.STAY 1	1	1				
19	90267–40105	.RIVET, BLIND	1	1				

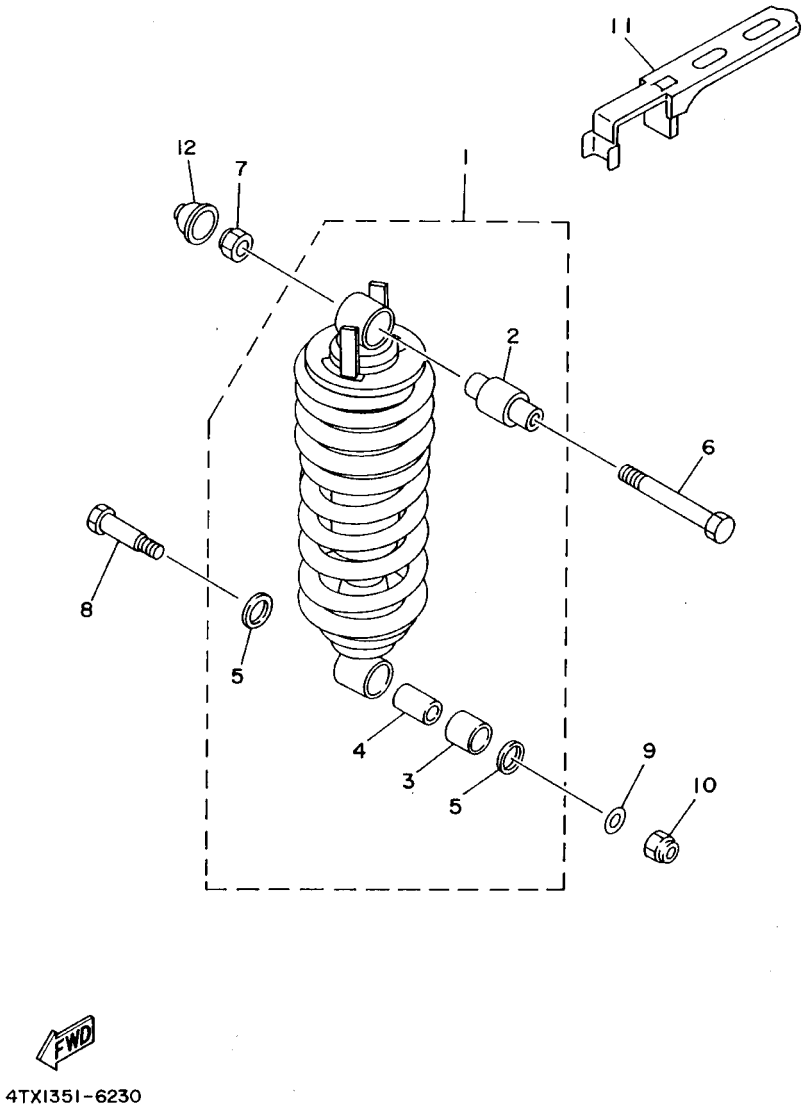

FIG. 23 REAR SUSPENSION

REF. NO.	PART NO.	DESCRIPTION	4TX6	4TX7				REMARKS
1	4TX–22210–00	SHOCK ABSORBER ASSY, REAR	1	1				
2	3VD–22216–00	.BUSH, REAR SHOCK ABSORBER	1	1				
3	90384–18190	.BUSH, BIMETAL FORMED	1	1				
4	90387–127X0	.COLLAR	1	1				
5	93109–18020	.OIL SEAL	2	2				
6	90109–125F1	BOLT	1	1				
7	95607–12100	NUT, U	1	1				
8	90101–10659	BOLT	1	1				
9	90201–124G9	WASHER, PLATE	1	1				
10	95617–10100	NUT, U	1	1				
11	3VD–22464–00	KNOB, CONTROL	1	1				
12	10V–83365–00	CAP	1	1				

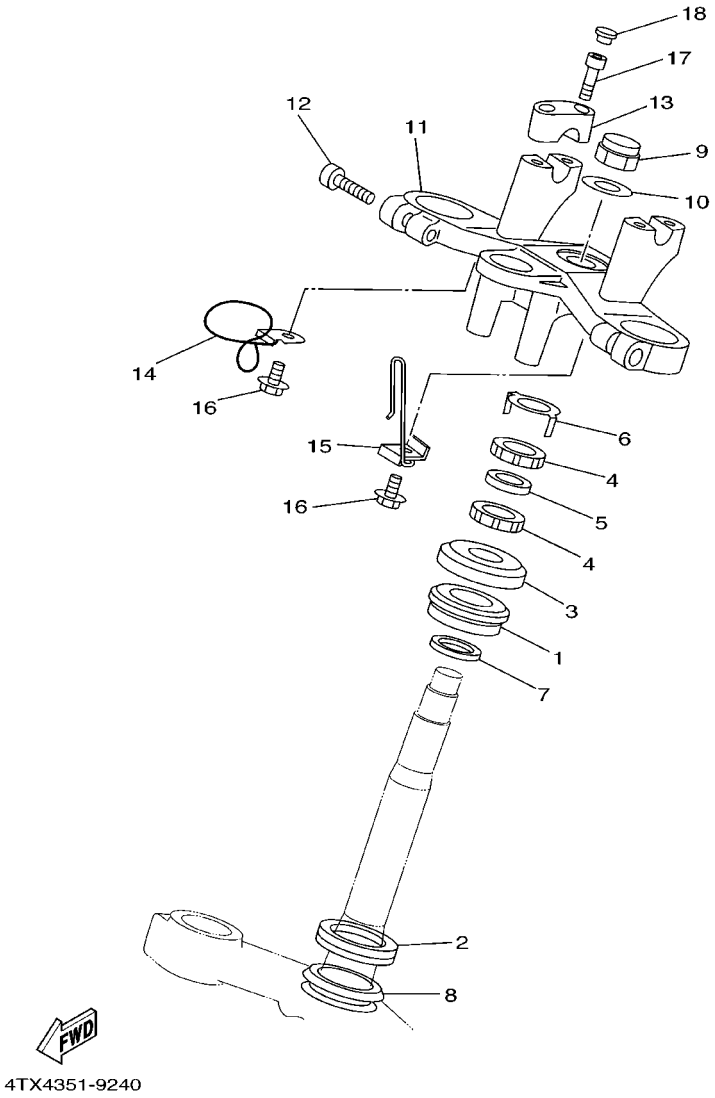

FIG. 24 STEERING

REF. NO.	PART NO.	DESCRIPTION	4TX6	4TX7				REMARKS
1	93399–99931	BEARING	1	1				
2	93399–99932	BEARING	1	1				
3	1W1–23416–00	COVER, BALL RACE 2	1	1				
4	90179–25033	NUT	2	2				
5	90202–26142	WASHER, PLATE	1	1				
6	26H–23418–01	WASHER, SPECIAL	1	1				
7	90202–24190	WASHER, PLATE	1	1				
8	3FV–23462–00	SEAL, STEERING	1	1				
9	90176–22081	NUT, CROWN	1	1				
10	90201–220T0	WASHER, PLATE	1	1				
11	4TX–23435–00	CROWN, HANDLE	1	1				
12	91314–08030	BOLT	2	2				
13	4H7–23441–00–P0	HOLDER, HANDLE UPPER	2	2				LGM1
14	4TX–23389–00	GUIDE, CABLE	1	1				
15	4TX–2331E–00	GUIDE, CABLE	1	1				
16	90105–06556	BOLT, WASHER BASED	2	2				
17	91314–08030	BOLT	4	4				
18	90338–08163	PLUG	4	4				

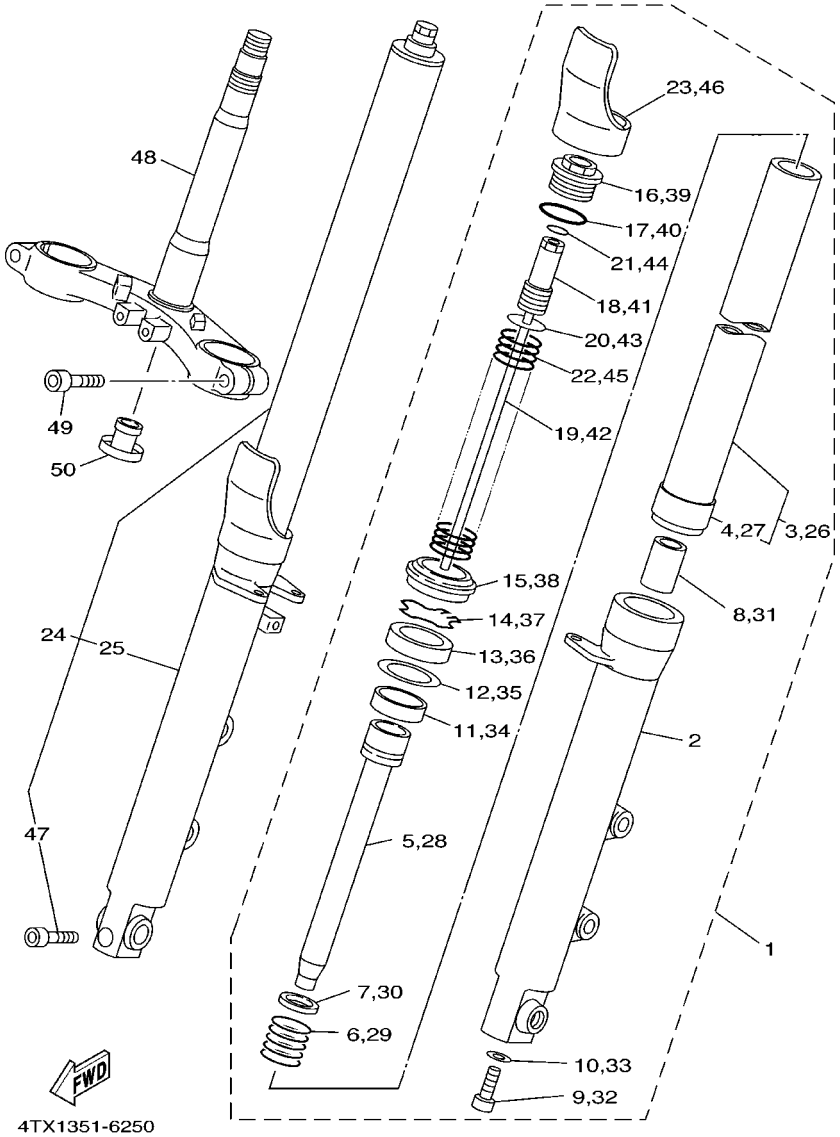

FIG. 25 FRONT FORK

REF. NO.	PART NO.	DESCRIPTION	4TX6	4TX7				REMARKS
1	4TX–23102–01	FRONT FORK ASSY (L.H)	1	1				
2	4TX–23126–01	.TUBE, OUTER (LEFT)	1	1				
3	4TX–23110–00	.INNER TUBE COMP.1	1	1				
4	4TX–23135–A0	..METAL, SLIDE 2	1	1				
5	4TX–23170–00	.CYLINDER COMP., FRONT FORK	1	1				
6	4TX–23151–00	.SPRING, REBOUND	1	1				
7	4TX–23157–00	.RING, PISTON	1	1				
8	4TX–23173–00	.SPINDLE, TAPER	1	1				
9	91317–10025	.BOLT	1	1				
10	90430–10171	.GASKET	1	1				
11	4TX–23125–A0	.METAL, SLIDE 1	1	1				
12	4TX–23115–00	.GUIDE, COVER UPPER	1	1				
13	4TX–23145–00	.OIL SEAL	1	1				
14	4TX–23156–00	.CLIP, OIL SEAL	1	1				
15	4TX–23144–00	.SEAL, DUST	1	1				
16	4TX–2311H–00	.FORK, BOLT	1	1				
17	93210–34504	.O–RING	1	1				
18	4TX–2311G–00	.BOLT, SPRINGADJUST	1	1				
19	4TX–2319K–00	.PLUNGER KIT	1	1				
20	4TX–2331L–00	.SEAT, SPRING UPPER	1	1				
21	93210–18N01	.O–RING	1	1				
22	4TX–23141–00	.SPRING, FRONT FORK	1	1				
23	4TX–2331G–00	.COVER	1	1				
24	4TX–23103–01	FRONT FORK ASSY (R.H)	1	1				
25	4TX–23136–01	.TUBE, OUTER (RIGHT)	1	1				
26	4TX–23110–00	.INNER TUBE COMP.1	1	1				
27	4TX–23135–A0	..METAL, SLIDE 2	1	1				

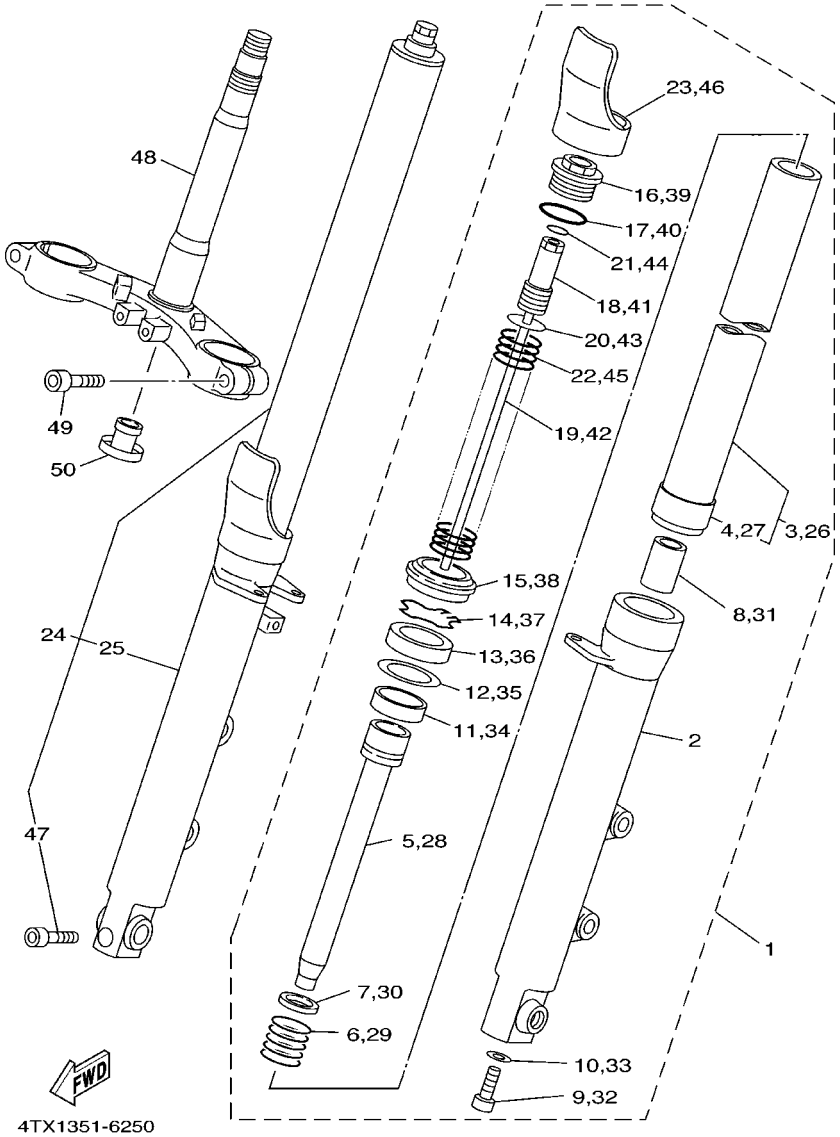

FIG. 25 FRONT FORK

REF. NO.	PART NO.	DESCRIPTION	4TX6	4TX7				REMARKS
28	4TX–23170–00	.CYLINDER COMP., FRONT FORK	1	1				
29	4TX–23151–00	.SPRING, REBOUND	1	1				
30	4TX–23157–00	.RING, PISTON	1	1				
31	4TX–23173–00	.SPINDLE, TAPER	1	1				
32	91317–10025	.BOLT	1	1				
33	90430–10171	.GASKET	1	1				
34	4TX–23125–A0	.METAL, SLIDE 1	1	1				
35	4TX–23115–00	.GUIDE, COVER UPPER	1	1				
36	4TX–23145–00	.OIL SEAL	1	1				
37	4TX–23156–00	.CLIP, OIL SEAL	1	1				
38	4TX–23144–00	.SEAL, DUST	1	1				
39	4TX–2311H–00	.FORK, BOLT	1	1				
40	93210–34504	.O–RING	1	1				
41	4TX–2311G–00	.BOLT, SPRINGADJUST	1	1				
42	4TX–2319K–00	.PLUNGER KIT	1	1				
43	4TX–2331L–00	.SEAT, SPRING UPPER	1	1				
44	93210–18N01	.O–RING	1	1				
45	4TX–23141–00	.SPRING, FRONT FORK	1	1				
46	4TX–2331G–00	.COVER	1	1				
47	91317–08040	.BOLT	1	1				
48	4TX–23340–00	UNDER BRACKET COMP.	1	1				
49	91317–10030	BOLT	2	2				
50	4KM–23123–01	COVER, LOWER 1	1	1				

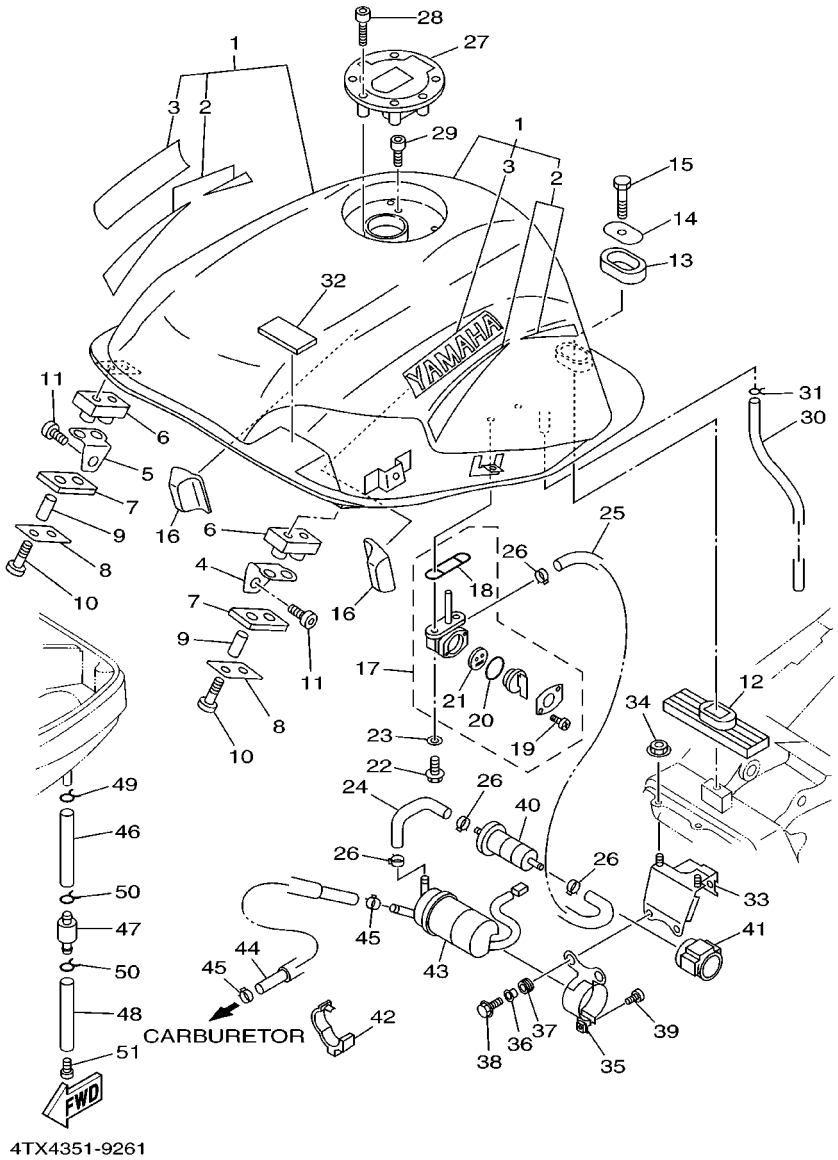

FIG. 26 FUEL TANK

REF. NO.	PART NO.	DESCRIPTION	4TX6	4TX7				REMARKS
1	4TX–Y2410–50–04	FUEL TANK COMP.	1	1				UR BL2
	4TX–Y2410–50–05	FUEL TANK COMP.	1	1				UR NM3 FOR SM1
	4TX–Y2410–50–02	FUEL TANK COMP.	1	1				UR VRC7
2	4TX–24240–A0	.GRAPHIC SET	1	1				UR FOR BL2
	4TX–24240–B0	.GRAPHIC SET	1	1				UR FOR SM1
	4TX–24240–80	.GRAPHIC SET	1	1				UR FOR VRC7
3	99227–00140	.EMBLEM, YAMAHA	2	2				UR BL2
	99224–00140	.EMBLEM, YAMAHA	2	2				UR SM1
	99226–00140	.EMBLEM, YAMAHA	2	2				UR VRC7
4	4TX–24191–00	BRACKET, FUEL TANK 1	1	1				
5	4TX–24192–00	BRACKET, FUEL TANK 2	1	1				
6	3VD–24181–00	DAMPER, LOCATING 1	2	2				
7	47X–24183–00	DAMPER, LOCATING 3	2	2				
8	47X–24186–00	WASHER, SPECIAL	2	2				
9	90387–06605	COLLAR	4	4				
10	92017–06035	BOLT, BUTTON HEAD	4	4				
11	90109–086A0	BOLT	2	2				
12	2GH–24184–00	DAMPER, LOCATING 4	1	1				
13	3Y6–24183–00	DAMPER, LOCATING 3	1	1				
14	12R–24186–00	WASHER, SPECIAL	1	1				
15	97007–08030	BOLT	1	1				
16	4TX–2411K–00	STOPPER	2	2				
17	4KM–24500–10	FUEL COCK ASSY 1	1	1				
18	4X8–24512–00	.O–RING	1	1				
19	98507–03008	.SCREW, PAN HEAD	2	2				
20	3AJ–24534–00	.SEAL, COCK	1	1				
21	3AJ–24523–00	.VALVE PACKING	1	1				

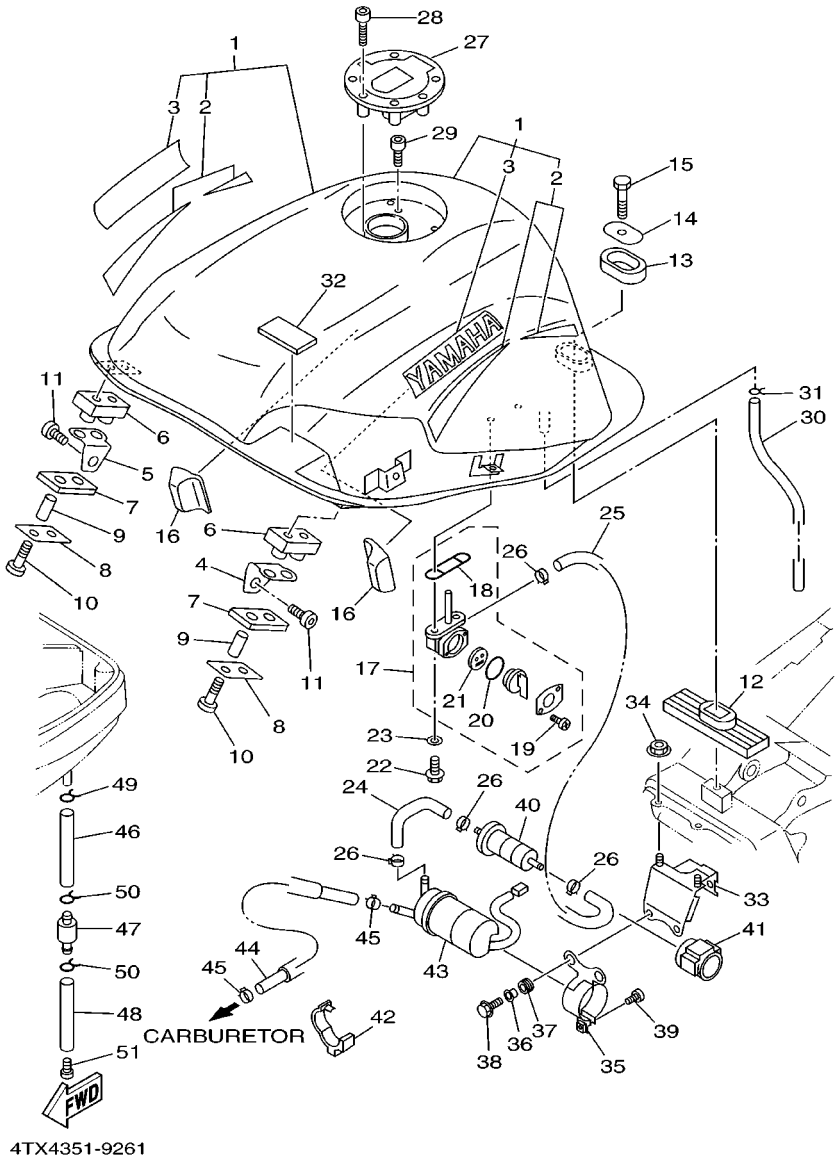

FIG. 26 FUEL TANK

REF. NO.	PART NO.	DESCRIPTION	4TX6	4TX7				REMARKS
22	90149–06011	SCREW	2	2				
23	90202–05193	WASHER, PLATE	2	2				
24	4TX–24311–40	PIPE, FUEL 1	1	1				
25	4TX–24315–40	PIPE 5	1	1				
26	90467–12053	CLIP	4	4				
27	4FM–24602–10	CAP ASSY	1	1				
28	90110–05112	BOLT, HEXAGON SOCKET HEAD	3	3				
29	91317–05010	BOLT	1	1				
30	90445–106J2	HOSE	1	1				
31	90467–09006	CLIP	1	1				
32	30X–2139X–00	DAMPER	2	2				
33	4TX–2452E–40	STAY	1	1				
34	95607–06200	NUT, SELF U–FLANGE	2	2				
35	3CV–24491–10	BRACKET, FUEL PUMP	1	1				
36	90387–062L2	COLLAR	2	2				
37	90480–13163	GROMMET	2	2				
38	95807–06016	BOLT, FLANGE	2	2				
39	98507–05010	SCREW, PAN HEAD	1	1				
40	1FK–24560–00	FILTER ASSY	1	1				
41	1FK–24566–00	BRACKET, FILTER	1	1				
42	90464–15192	CLAMP	1	1				
43	4TX–13907–40	FUEL PUMP COMP.	1	1				
44	4TX–14294–40	HOSE	1	1				
45	90467–12053	CLIP	2	2				
46	90445–11153	HOSE	1	1				
47	4X7–2149Y–00	FILTER ASSY	1	1				
48	90445–112E1	HOSE	1	1				

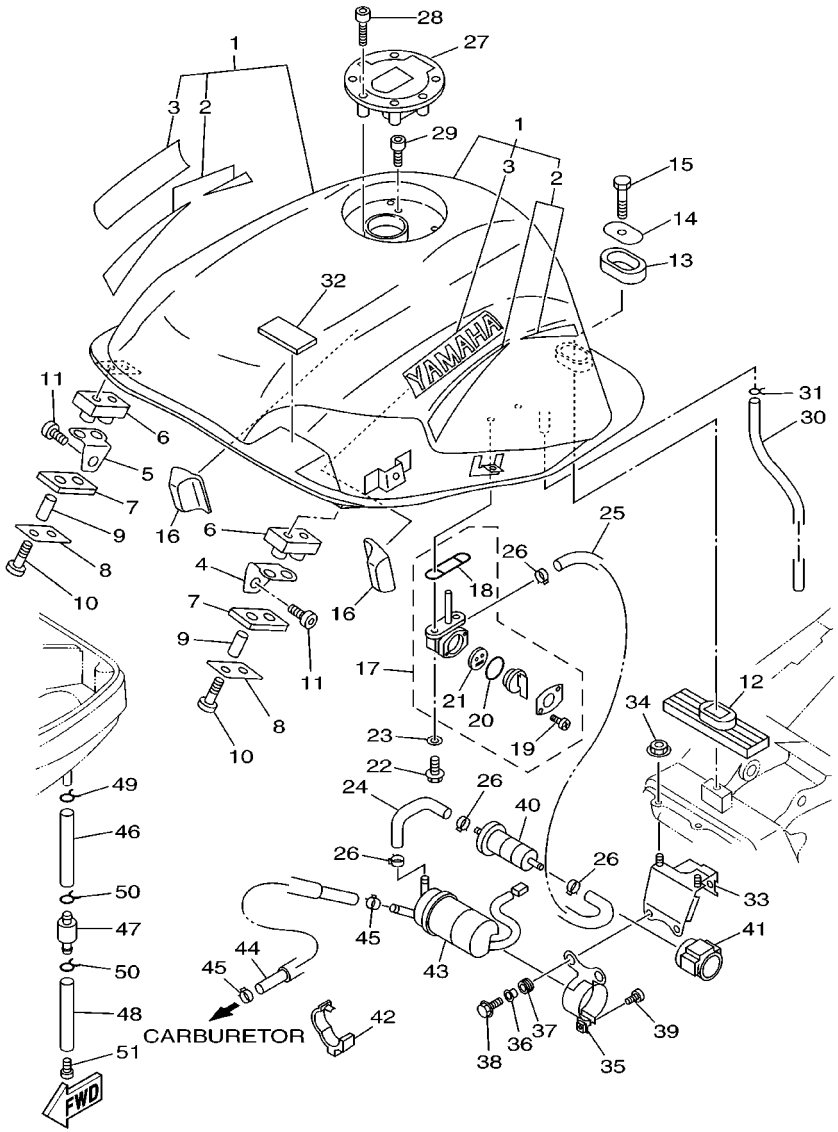

FIG. 26 FUEL TANK

REF. NO.	PART NO.	DESCRIPTION	4TX6	4TX7				REMARKS
49	90467–11106	CLIP	1	1				
50	90467–10041	CLIP	2	2				
51	90338–08174	PLUG	1	1				

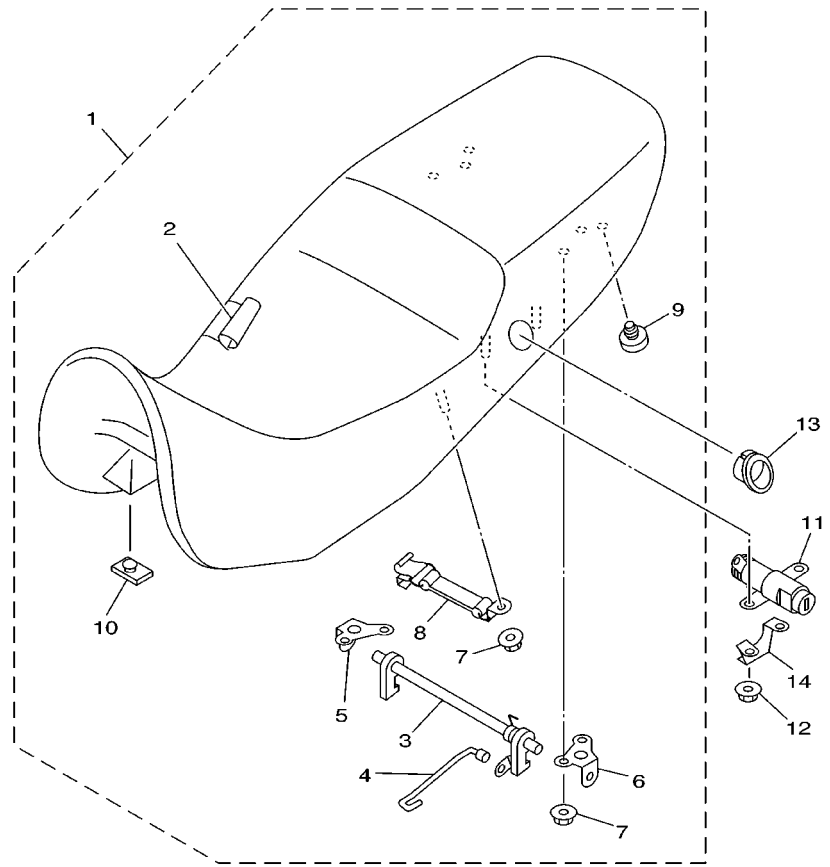

FIG. 27 SEAT

REF. NO.	PART NO.	DESCRIPTION	4TX6	4TX7				REMARKS
1	4TX–24730–01	DOUBLE SEAT ASSY	1	1				
2	4TX–24731–00	.COVER, SEAT	1	1				
3	4TX–24776–01	.LEVER, SEAT	1	1				
4	4TX–2478F–00	.ROD, CONNECTING	1	1				
5	4TX–24728–00	.BRACKET, SEAT	1	1				
6	4TX–24718–00	.BRACKET, SEAT	1	1				
7	90179–06635	.NUT	6	6				
8	4TX–21376–00	.BAND, TOOL	2	2				
9	22W–24741–00	.PAD, SEAT	2	2				
10	509–24724–00	.DAMPER, SEAT	2	2				
11	4BH–24705–00	SEAT LOCK ASSY	1	1				
12	95707–05500	NUT, FLANGE	2	2				
13	47X–24796–00	COVER	1	1				
14	4TX–24748–00	BRACKET, SEAT	1	1				

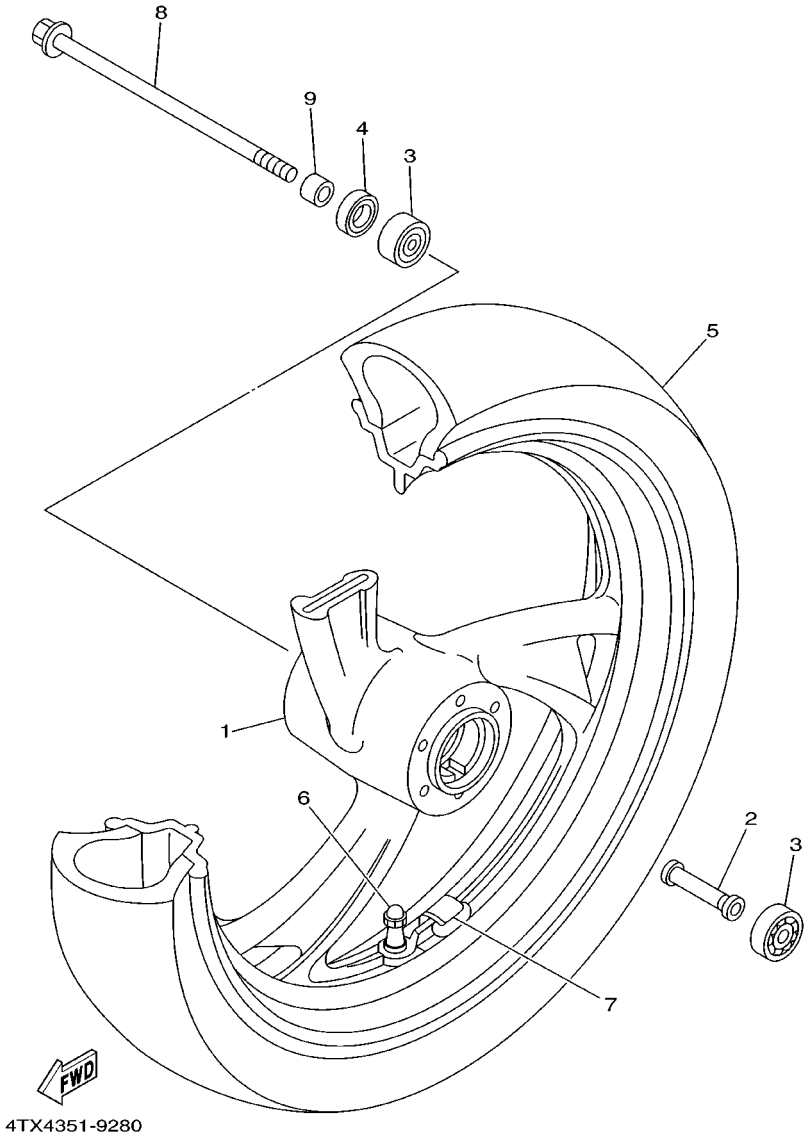

FIG. 28 FRONT WHEEL

REF. NO.	PART NO.	DESCRIPTION	4TX6	4TX7				REMARKS
1	3VD–25168–00–7B	CAST WHEEL, FRONT	1	1				BIB2
2	90560–17233	SPACER	1	1				
3	93306–30319	BEARING	2	2				
4	93102–28022	OIL SEAL	1	1				
5	94111–1810C	TIRE (110/80ZR18 BATTLAX BT–54F)	1	1				UR BRIDGESTONE
	*	TIRE (110/80ZR18 MACADAM 90X)	1					UR LM MICHELIN FOR ITALY
6	93900–00030	VALVE, RIM	1	1				
7	29L–25398–00	BALANCER, WHEEL (10G)	1	1				UR
	29L–25398–10	BALANCER, WHEEL (20G)	1	1				UR
	29L–25398–20	BALANCER, WHEEL (30G)	1	1				UR
8	3GM–25181–03	AXLE, WHEEL	1	1				
9	90387–177R1	COLLAR	1	1				

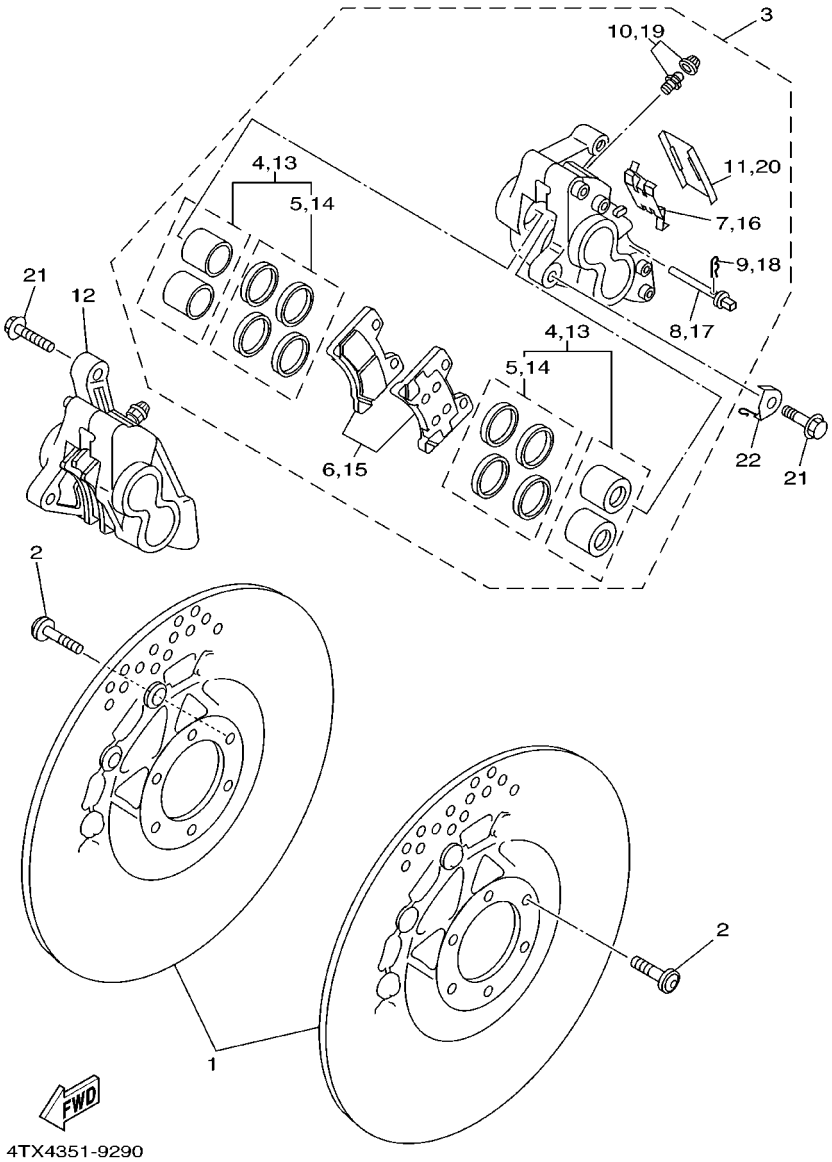

FIG. 29 FRONT BRAKE CALIPER

REF. NO.	PART NO.	DESCRIPTION	4TX6	4TX7				REMARKS
1	4HM–2581T–01	DISC BRAKE ASSY	2	2				
2	90109–083G4	BOLT	12	12				
3	3HE–2580T–70	CALIPER ASSY (LEFT)	1	1				
4	3HE–W0057–50	.PISTON ASSY, CALIPER	2	2				
5	3HE–W0047–50	..CALIPER SEAL KIT	2	2				
6	3GM–W0045–03	.BRAKE PAD KIT	1	1				
7	3GM–25919–00	.SUPPORT, PAD	1	1				
8	3HE–25924–00	.PIN, PAD	2	2				
9	3GM–25925–00	.CLIP	2	2				
10	1J3–W0048–00	.BLEED SCREW KIT	1	1				
11	1KT–25836–00	.COVER, DUST	1	1				
12	3HE–2580U–70	CALIPER ASSY (RIGHT)	1	1				
13	3HE–W0057–50	.PISTON ASSY, CALIPER	2	2				
14	3HE–W0047–50	..CALIPER SEAL KIT	2	2				
15	3GM–W0045–03	.BRAKE PAD KIT	1	1				
16	3GM–25919–00	.SUPPORT, PAD	1	1				
17	3HE–25924–00	.PIN, PAD	2	2				
18	3GM–25925–00	.CLIP	2	2				
19	1J3–W0048–00	.BLEED SCREW KIT	1	1				
20	1KT–25836–00	.COVER, DUST	1	1				
21	90105–10638	BOLT, WASHER BASED	4	4				
22	4YR–23317–00	HOLDER, CABLE	1	1				

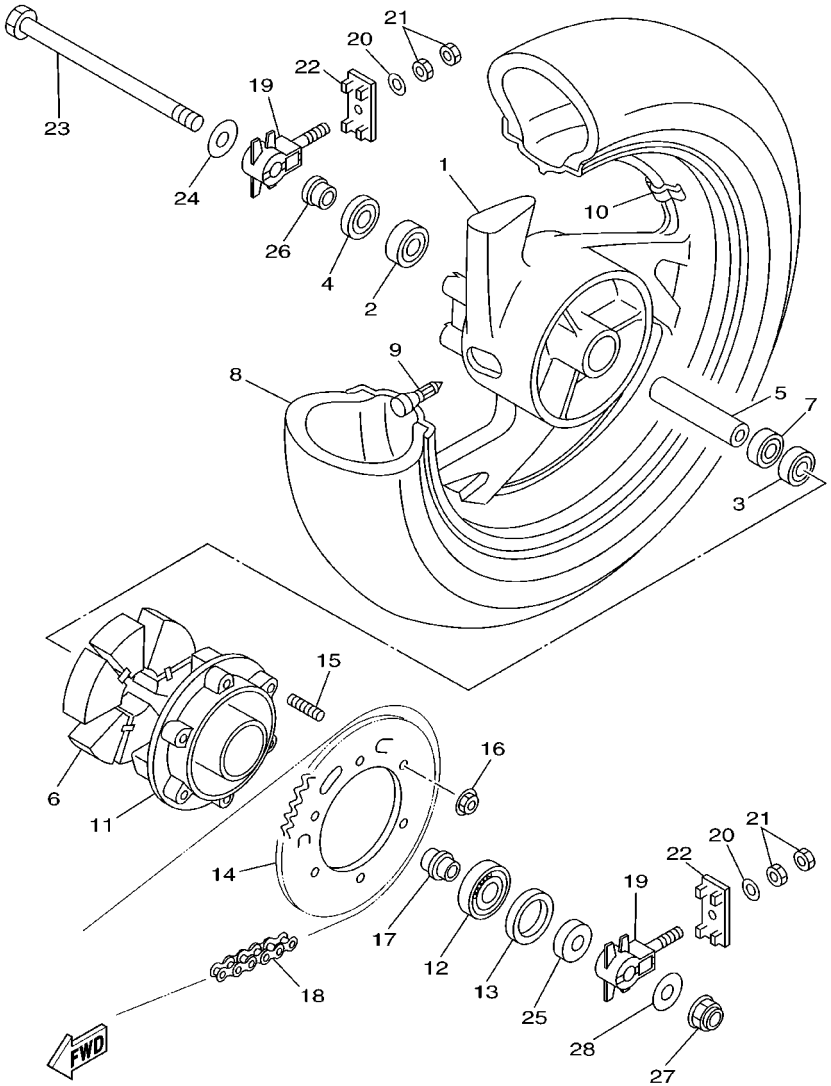

4TX6300-0300

FIG. 30 REAR WHEEL

REF. NO.	PART NO.	DESCRIPTION	4TX6	4TX7				REMARKS
1	3VD–25338–00–7B	CAST WHEEL, REAR	1	1				BIB2
2	93306–30320	BEARING	1	1				
3	93306–20314	BEARING (B6203)	1	1				
4	93102–25044	OIL SEAL	1	1				
5	90387–173M5	COLLAR	1	1				
6	4TX–25364–40	DAMPER	3	3				
7	93306–20314	BEARING (B6203)	1	1				
8	94115–1710D	TIRE (150/70ZR17 BATTLAX BT–54R)	1	1				UR BRIDGESTONE
	*	TIRE (150/70ZR17 MACADAM 90X)	1					UR LM MICHELIN FOR ITALY
9	93900–00030	VALVE, RIM	1	1				
10	29L–25398–00	BALANCER, WHEEL (10G)	1	1				UR
	29L–25398–10	BALANCER, WHEEL (20G)	1	1				UR
	29L–25398–20	BALANCER, WHEEL (30G)	1	1				UR
11	1AE–25366–00	CLUTCH, HUB	1	1				
12	93306–37207	BEARING	1	1				
13	93105–42024	OIL SEAL	1	1				
14	4TX–25443–40	SPROCKET, DRIVEN (43T)	1	1				
15	90116–10485	BOLT, STUD	6	6				
16	95607–10200	NUT, SELF–LOCKING	6	6				
17	90387–177K0	COLLAR	1	1				
18	94581–46114	CHAIN (D.I.D.525HV–114LE)	1	1				
19	4BP–25388–00	PULLER, CHAIN 1	2	2				
20	92907–08200	WASHER	2	2				
21	95307–08600	NUT	4	4				
22	3HE–22174–00	END 1	2	2				
23	3AJ–25381–01	AXLE, WHEEL	1	1				
24	90201–170T3	WASHER, PLATE	1	1				

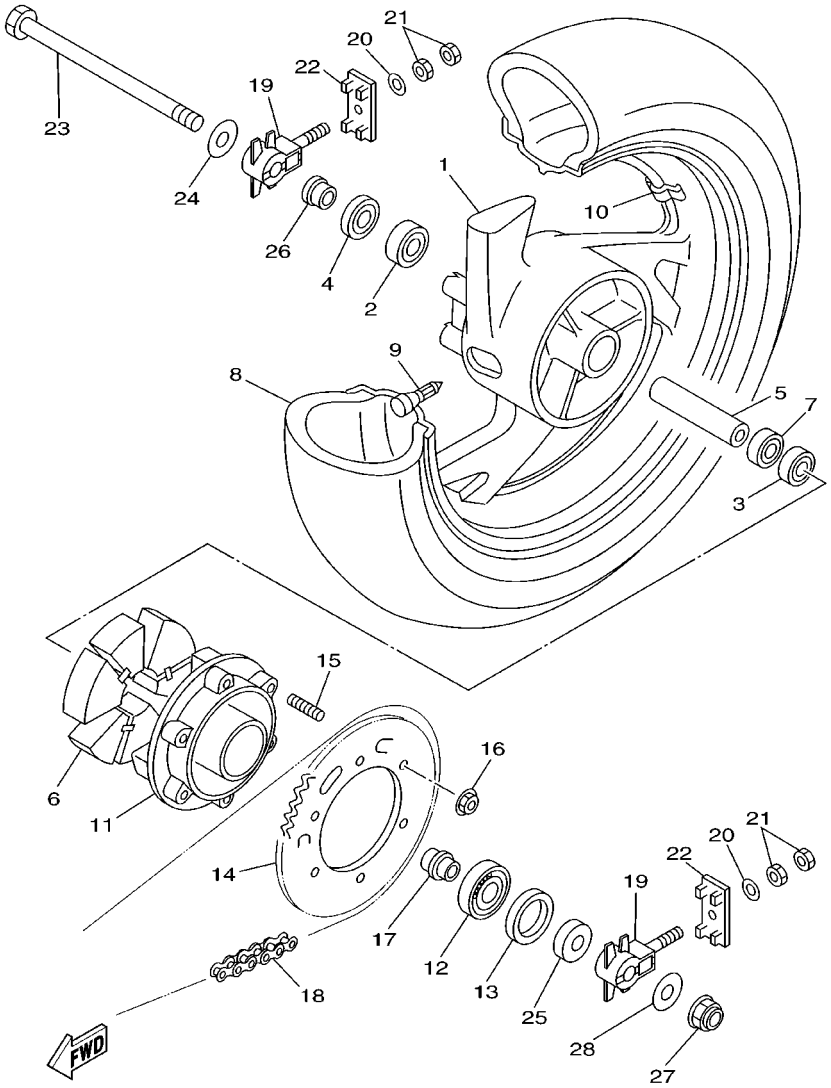

4TX6300-0300

FIG. 30 REAR WHEEL

REF. NO.	PART NO.	DESCRIPTION	4TX6	4TX7				REMARKS
25	90387–177Y5	COLLAR	1	1				
26	90387–177Y4	COLLAR	1	1				
27	95604–16200	NUT, U FLANGE	1	1				
28	90201–160T2	WASHER, PLATE	1	1				

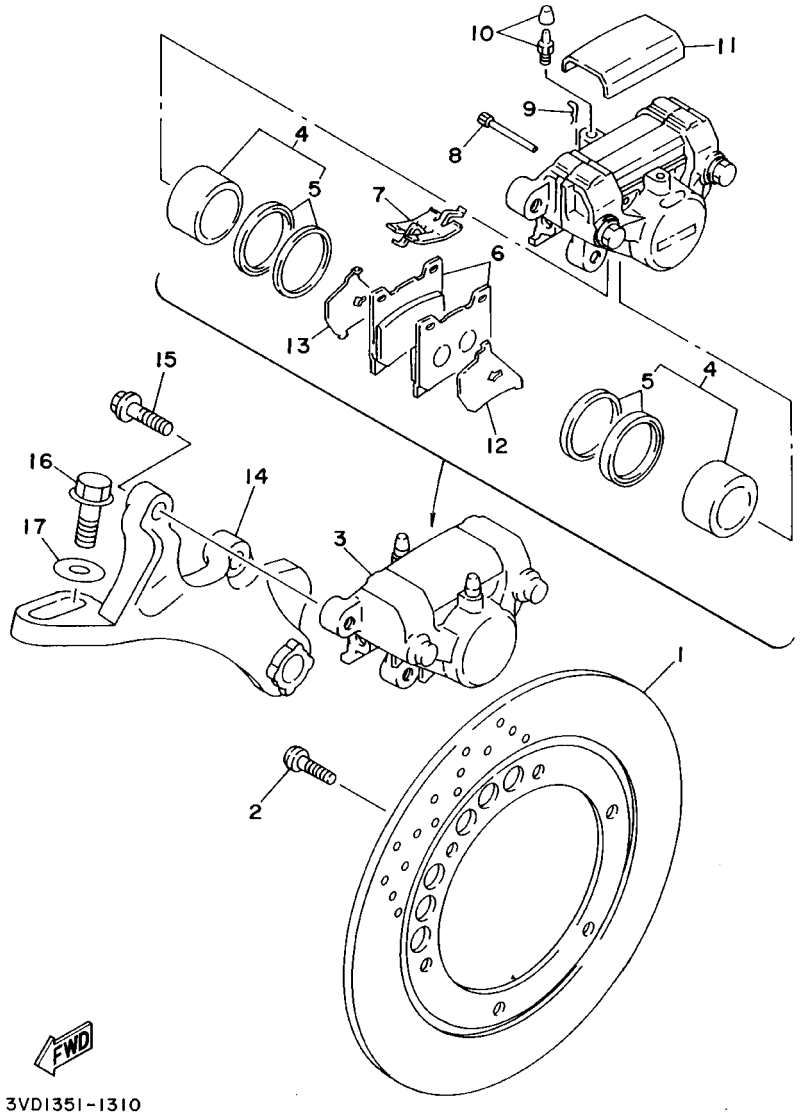

FIG. 31 REAR BRAKE CALIPER

REF. NO.	PART NO.	DESCRIPTION	4TX6	4TX7				REMARKS
1	4HM–2582W–00	DISC, REAR BRAKE 2	1	1				
2	90109–083G4	BOLT	6	6				
3	4TX–2580W–00	CALIPER ASSY, REAR 2	1	1				
4	31A–W0057–00	.PISTON ASSY, CALIPER	1	1				
5	31A–W0047–00	..CALIPER SEAL KIT	1	1				
6	4SV–W0045–50	.BRAKE PAD KIT	1	1				
7	29L–25919–00	.SUPPORT, PAD	1	1				
8	3HE–25924–00	.PIN, PAD	2	2				
9	3GM–25925–00	.CLIP	2	2				
10	1J3–W0048–00	.BLEED SCREW KIT	2	2				
11	42H–25836–00	.COVER, DUST	1	1				
12	1FK–25827–00	.SHIM, CALIPER	1	1				
13	1FK–25828–00	.SHIM, CALIPER	1	1				
14	3VD–25819–00	BRACKET, CALIPER	1	1				
15	90105–10638	BOLT, WASHER BASED	2	2				
16	95827–10030	BOLT, FLANGE	1	1				
17	90201–10437	WASHER, PLATE	1	1				

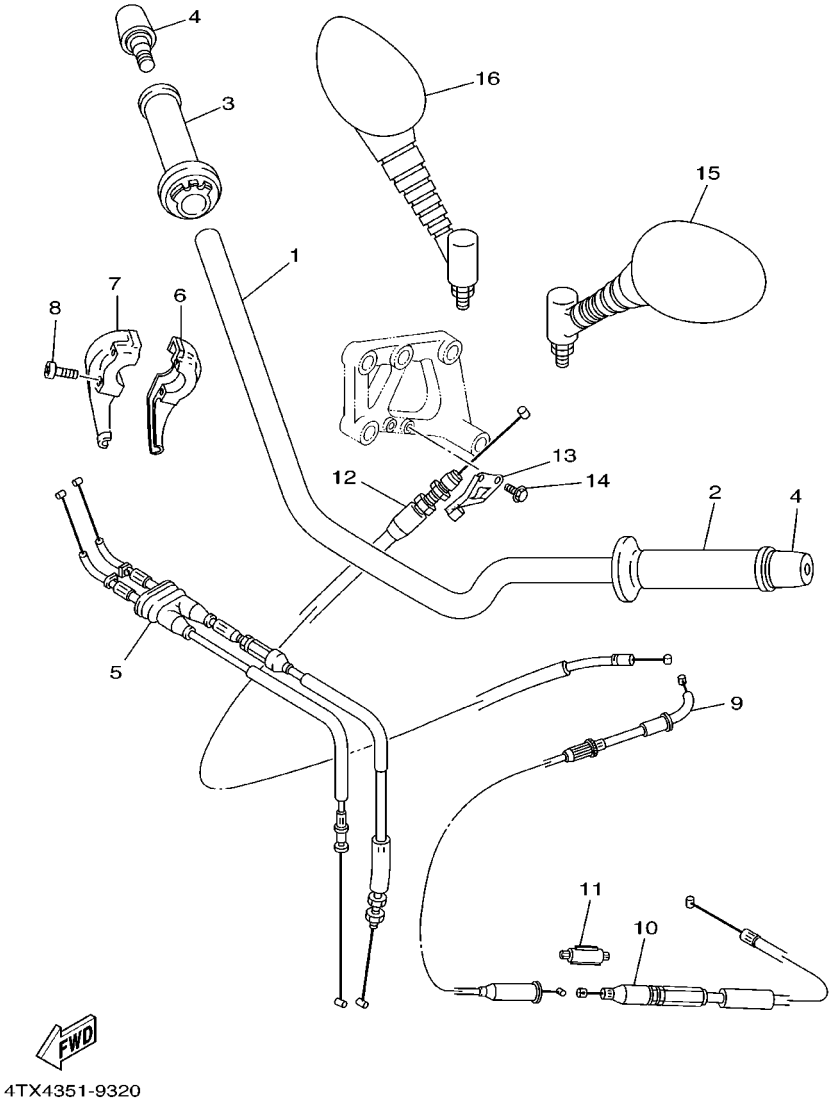

FIG. 32 STEERING HANDLE. CABLE

REF. NO.	PART NO.	DESCRIPTION	4TX6	4TX7				REMARKS
1	3VD–26111–20	HANDLEBAR	1	1				
2	1KG–26241–00	GRIP (LEFT)	1	1				
3	3FH–26240–00	GRIP ASSY	1	1				
4	51J–26246–01	END, GRIP	2	2				
5	4TX–26302–40	THROTTLE CABLE ASSY	1	1				
6	3XW–26281–01	CAP, GRIP UPPER	1	1				
7	3XW–26282–01	CAP, GRIP LOWER	1	1				
8	98507–05035	SCREW, PAN HEAD	2	2				
9	4TX–26331–40	CABLE, STARTER 1	1	1				
10	4TX–26334–40	CABLE, STARTER 2	1	1				
11	3VP–26261–00	CONNECTOR, CABLE	1	1				
12	4TX–26335–01	CABLE, CLUTCH	1	1				
13	4TX–26292–00	STAY	1	1				
14	95027–06012	BOLT, FLANGE	2	2				
15	4TX–26280–41	REAR VIEW MIRROR ASSY(LEFT)	1	1				
16	4TX–26290–41	REAR VIEW MIRROR ASSY(RIGHT)	1	1				

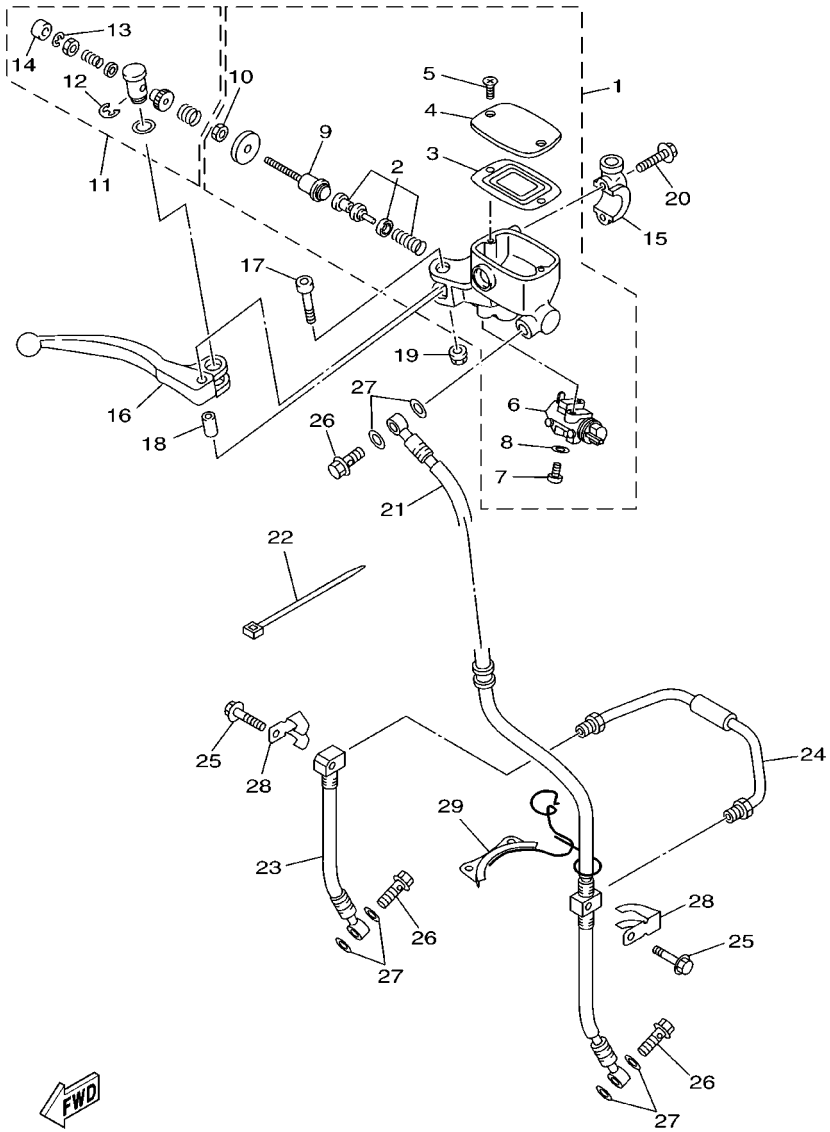

FIG. 33 FRONT MASTER CYLINDER

REF. NO.	PART NO.	DESCRIPTION	4TX6	4TX7				REMARKS
1	4TX–W2587–00	MASTER CYLINDER SUB ASSY	1	1				
2	4BH–W0041–00	.CYLINDER KIT, MASTER	1	1				
3	3YX–25854–00	.DIAPHRAGM, RESERVOIR	1	1				
4	4TX–25852–00	.CAP, RESERVOIR	1	1				
5	98706–04012	.SCREW, FLAT HEAD	2	2				
6	4BH–83980–00	.FRONT STOP SWITCH ASSY	1	1				
7	98506–04014	.SCREW, PAN HEAD	2	2				
8	92906–04600	.WASHER, PLATE	2	2				
9	3YX–25880–00	.PUSH ROD COMP.	1	1				
10	95301–06600	.NUT	1	1				
11	3YX–W0091–02	SCREW KIT, MASTERCYLINDER	1	1				
12	3YX–25866–00	.CIRCLIP	1	1				
13	3YX–25866–10	.CIRCLIP	1	1				
14	3YX–2583H–00	.BOOT	1	1				
15	3YX–25867–00	BRACKET, MASTER CYLINDER	1	1				
16	3YX–83922–00	LEVER 2	1	1				
17	3YX–2589F–00	BOLT, LEVER	1	1				
18	3YX–25838–00	SLEEVE, CALIPER	1	1				
19	95606–06100	NUT, U	1	1				
20	95026–06030	BOLT, FLANGE	2	2				
21	4TX–25872–40	HOSE, BRAKE 1	1	1				
22	1UA–82591–00	BAND	2	2				
23	4TX–25874–00	HOSE, BRAKE	1	1				
24	4TX–25871–00	PIPE, BRAKE	1	1				
25	95024–06025	BOLT, FLANGE	2	2				
26	90401–10159	BOLT, UNION	3	3				
27	90201–10118	WASHER, PLATE	6	6				

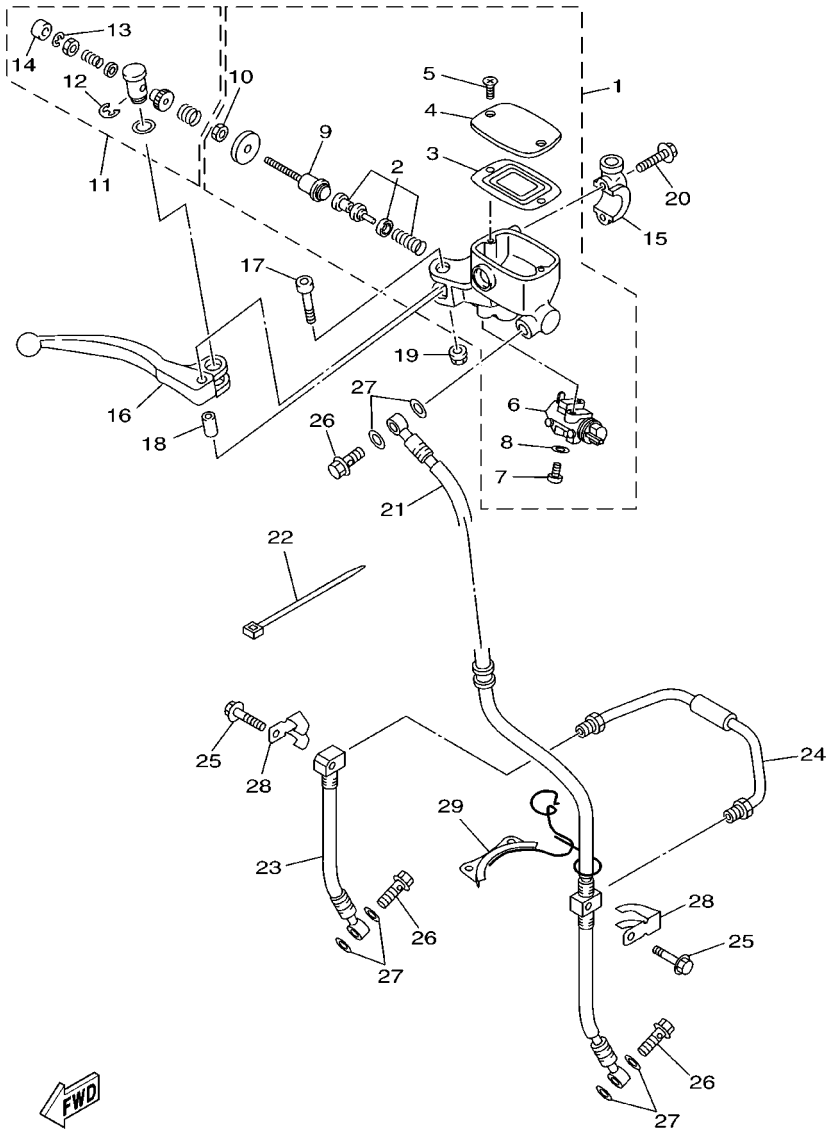

FIG. 33 FRONT MASTER CYLINDER

REF. NO.	PART NO.	DESCRIPTION	4TX6	4TX7				REMARKS
28	4TX–25875–00	HOLDER, BRAKE HOSE 1	2	2				
29	4TX–26131–10	GUIDE, CABLE 1	1	1				

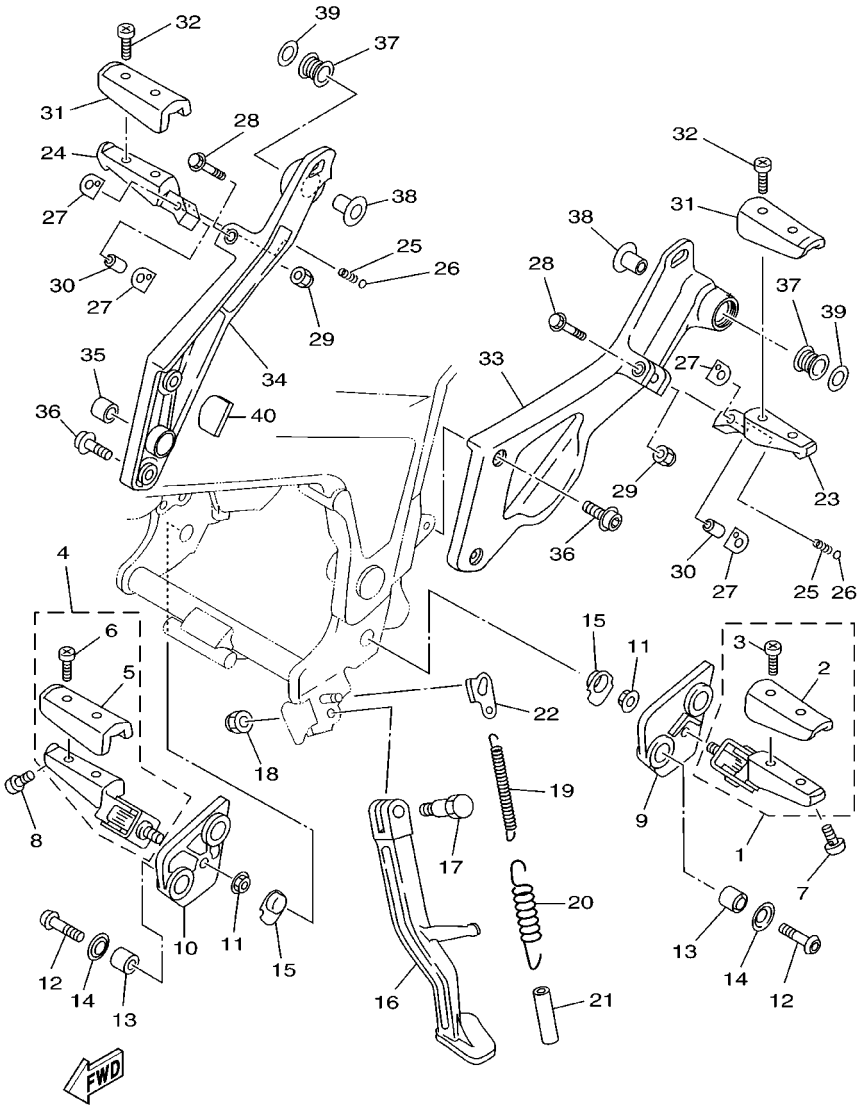

FIG. 34 STAND. FOOTREST

REF. NO.	PART NO.	DESCRIPTION	4TX6	4TX7				REMARKS
1	1UA–27410–00	FRONT FOOTREST ASSY (LEFT)	1	1				
2	46X–27413–00	.COVER, FOOTREST	1	1				
3	90157–05079	.SCREW, PAN HEAD	2	2				
4	1UA–27420–00	FRONT FOOTREST ASSY (RIGHT)	1	1				
5	46X–27413–00	.COVER, FOOTREST	1	1				
6	90157–05079	.SCREW, PAN HEAD	2	2				
7	90109–083E2	BOLT	1	1				
8	90109–083E2	BOLT	1	1				
9	3VD–27442–11	BRACKET 2	1	1				
10	3VD–27443–11	BRACKET 3	1	1				
11	90179–10247	NUT	2	2				
12	90110–08071	BOLT, HEXAGON SOCKET HEAD	4	4				
13	1NL–27424–00	DAMPER, FOOTREST 2	4	4				
14	90209–08295	WASHER	4	4				
15	3VD–27414–00	DAMPER, FOOTREST	2	2				
16	3VD–27311–01	STAND, SIDE	1	1				
17	90109–104E6	BOLT	1	1				
18	90185–10037	NUT, SELF–LOCKING	1	1				
19	90506–18224	SPRING, TENSION	1	1				
20	90506–26225	SPRING, TENSION	1	1				
21	1TX–27351–00	GUIDE, SIDE STAND	1	1				
22	3VD–27315–00	LINK, SIDE STAND	1	1				
23	4BR–27431–00	FOOTREST, REAR 1	1	1				
24	4BR–27441–00	FOOTREST, REAR 2	1	1				
25	90501–12743	SPRING, COMPRESSION	2	2				
26	93501–04011	BALL	2	2				
27	1HX–27437–00	WASHER, SPECIAL	4	4				

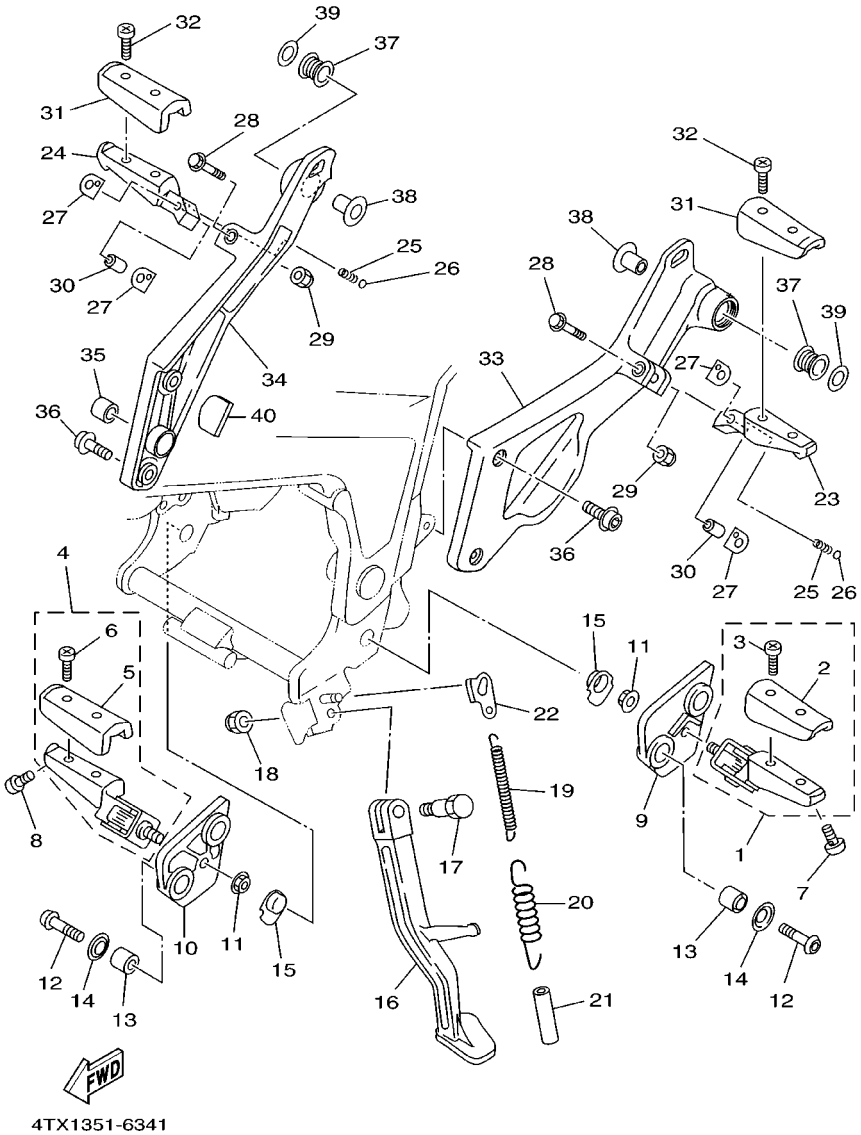

FIG. 34 STAND. FOOTREST

REF. NO.	PART NO.	DESCRIPTION	4TX6	4TX7				REMARKS
28	95024–06045	BOLT, FLANGE	2	2				
29	95604–06200	NUT, U FLANGE	2	2				
30	90387–064H8	COLLAR	2	2				
31	2GH–27413–00	COVER, FOOTREST	2	2				
32	90157–05079	SCREW, PAN HEAD	4	4				
33	4TX–27412–00	BRACKET, FOOTREST 1	1	1				
34	4TX–27422–00	BRACKET, FOOTREST 2	1	1				
35	90380–20213	BUSH, SOLID	1	1				
36	90110–08199	BOLT, HEXAGON SOCKET HEAD	4	4				
37	36Y–27424–00	DAMPER, FOOTREST 2	2	2				
38	90387–104L8	COLLAR	2	2				
39	90201–10669	WASHER, PLATE	2	2				
40	3VD–2139X–00	DAMPER	1	1				

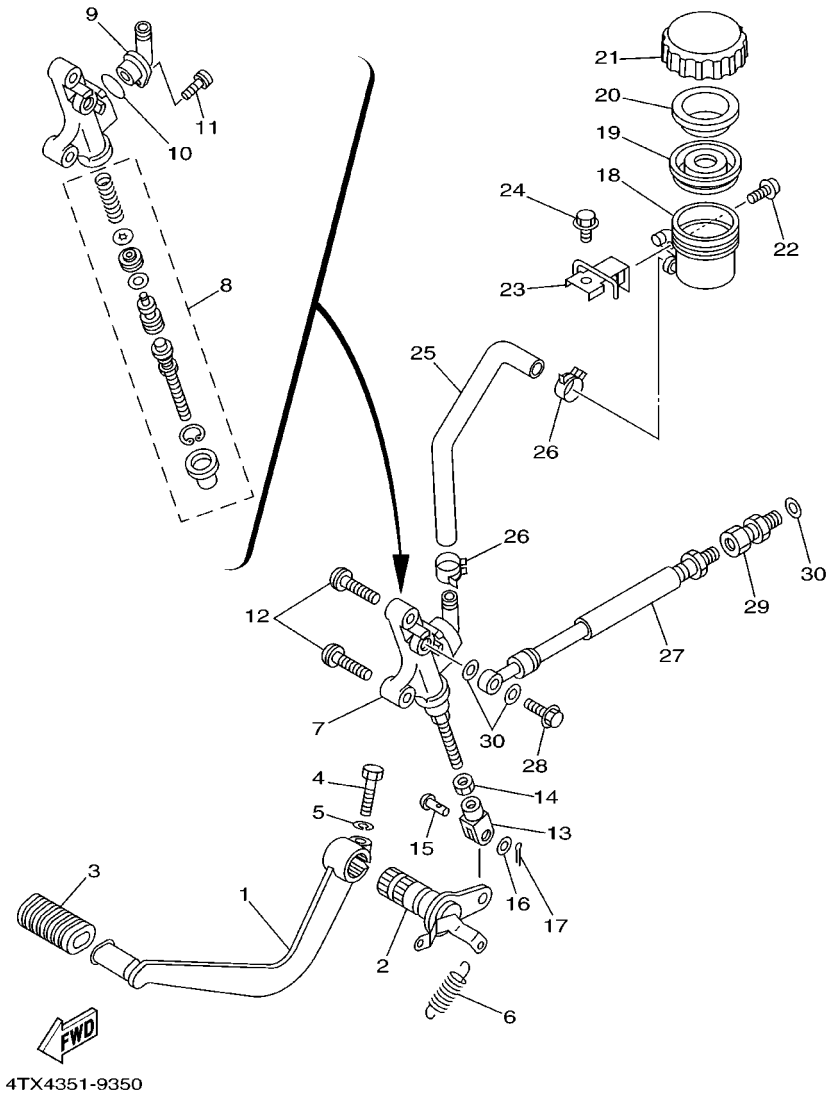

FIG. 35 REAR MASTER CYLINDER

REF. NO.	PART NO.	DESCRIPTION	4TX6	4TX7				REMARKS
1	3VD–27211–00	PEDAL, BRAKE	1	1				
2	3VD–27212–00	SHAFT, BRAKE PEDAL	1	1				
3	22N–18113–00	COVER, SHIFT PEDAL	1	1				
4	90101–06278	BOLT	1	1				
5	92907–06100	WASHER, SPRING	1	1				
6	90506–20192	SPRING, TENSION	1	1				
7	4TX–2583V–00	RR. MASTER CYLINDER ASSY.	1	1				
8	3VD–W0042–50	.CYLINDER KIT, MASTER	1	1				
9	3LN–2582A–00	.JOINT	1	1				
10	3LN–2585F–00	.O–RING	1	1				
11	3LN–2585H–00	.SCREW,SET	1	1				
12	92014–08020	BOLT, BUTTON HEAD	2	2				
13	47X–27222–00	JOINT	1	1				
14	95307–08700	NUT	1	1				
15	90240–08013	PIN, CLEVIS	1	1				
16	90201–08083	WASHER, PLATE	1	1				
17	91401–20012	PIN, COTTER	1	1				
18	47X–25894–00	TANK, RESERVOIR	1	1				
19	360–25854–01	DIAPHRAGM, RESERVOIR	1	1				
20	2GU–25855–00	BUSH,DIAPHRAGM	1	1				
21	2KF–25852–50	CAP, RESERVOIR	1	1				
22	90159–06056	SCREW, WITH WASHER	1	1				
23	3VD–2582E–10	HOLDER, RESERVE TANK	1	1				
24	95827–06010	BOLT, FLANGE	1	1				
25	3VD–25895–01	HOSE, RESERVOIR	1	1				
26	90467–14057	CLIP	2	2				
27	3VD–25872–51	HOSE, BRAKE 1	1	1				

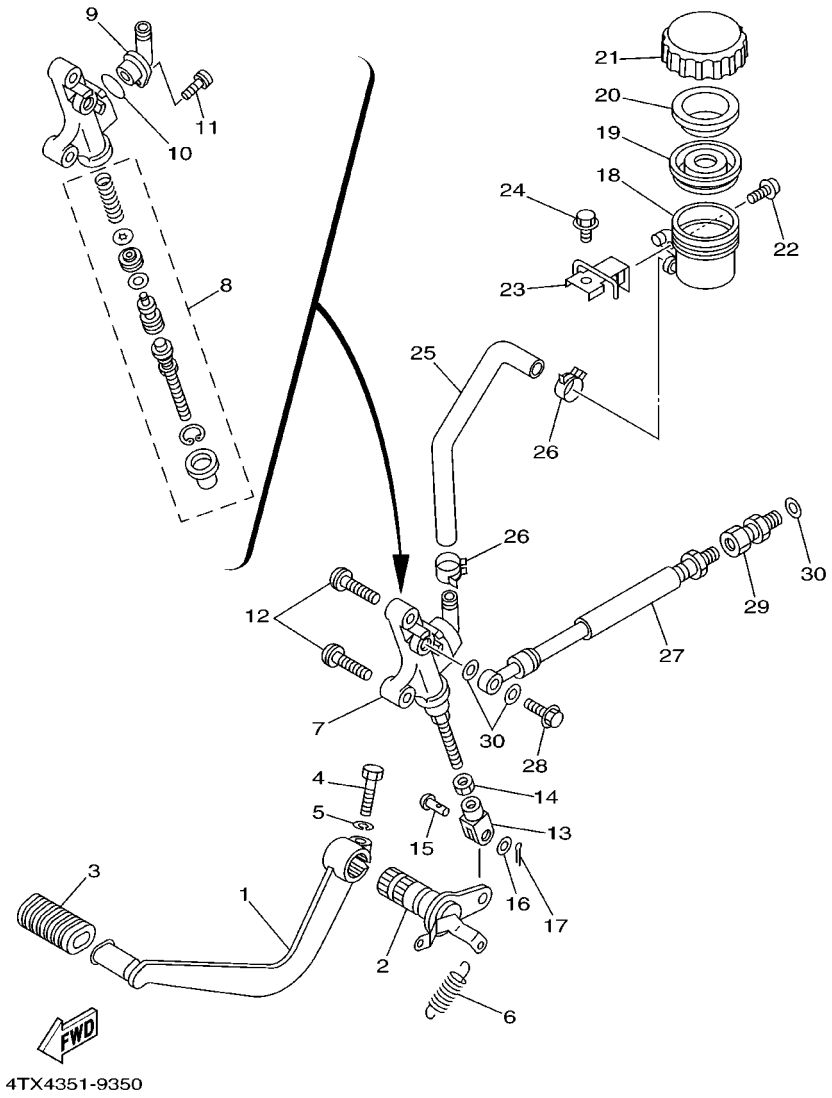

FIG. 35 REAR MASTER CYLINDER

REF. NO.	PART NO.	DESCRIPTION	4TX6	4TX7				REMARKS
28	90401–10159	BOLT, UNION	1	1				
29	3LC–25885–00	JOINT	1	1				
30	90201–10118	WASHER, PLATE	3	3				

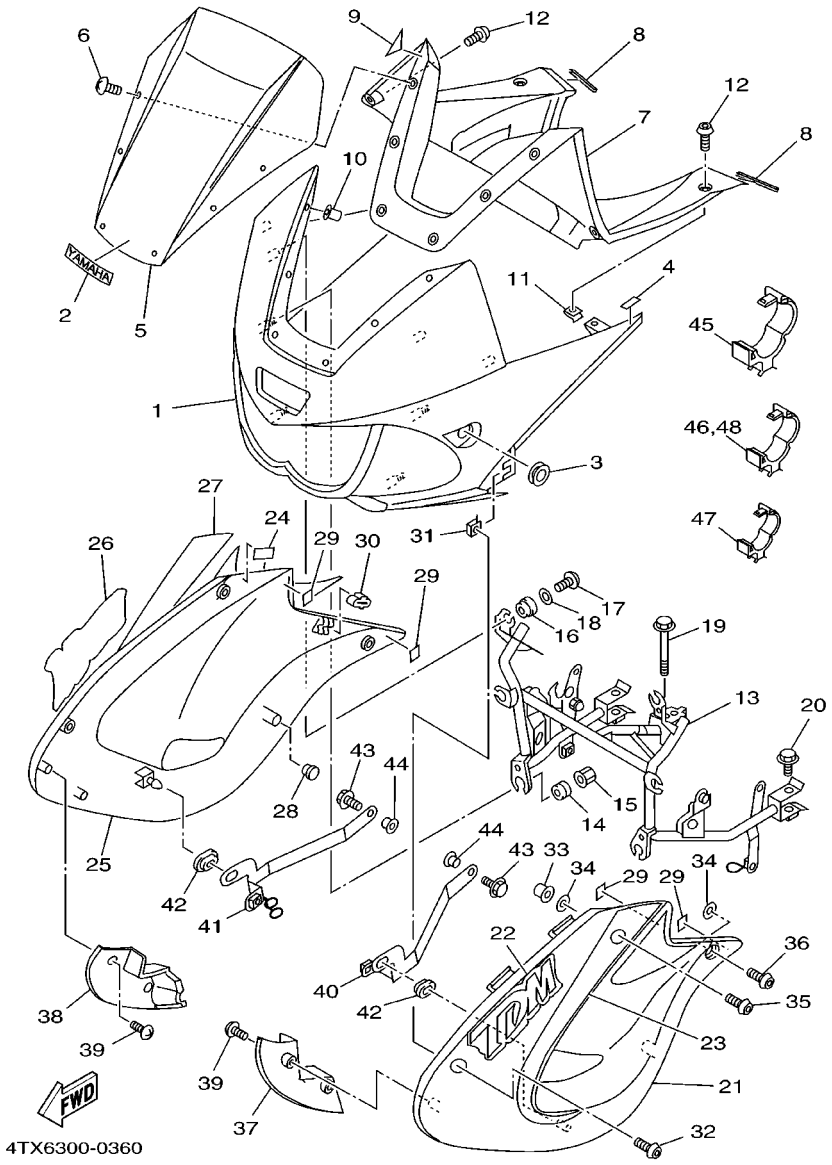

FIG. 36 COWLING 1

REF. NO.	PART NO.	DESCRIPTION	4TX6	4TX7				REMARKS
1	4TX–2835G–00–0X	BODY, FRONT UPPER 1	1	1				UR BL2/LGB
	4TX–2835G–00–7X	BODY, FRONT UPPER 1	1	1				UR NM3/LGB
	4TX–2835G–00–5X	BODY, FRONT UPPER 1	1	1				UR VRC7/LGB
2	99247–00080	EMBLEM, YAMAHA	1	1				
3	4KM–28371–00	DAMPER	2	2				
4	4TX–21717–00	DAMPER	4	4				
5	4TX–28381–00	WINDSHIELD	1	1				
6	90150–05024	SCREW, ROUND HEAD	6	6				
7	4TX–2836K–40	PANEL, INNER 1	1	1				
8	4TX–28345–00	MOLE 1	2	2				
9	4TX–21649–00	DAMPER	2	2				
10	90179–05523	NUT	6	6				
11	90183–05042	NUT, SPRING	2	2				
12	90167–05076	SCREW, TAPPING	4	4				
13	4TX–28356–40	STAY 1	1	1				
14	90480–14229	GROMMET	4	4				
15	90179–06500	NUT	4	4				
16	90480–13426	GROMMET	2	2				
17	97707–40010	SCREW, TAPPING	2	2				
18	90201–052E8	WASHER, PLATE	2	2				
19	95817–08080	BOLT, FLANGE	1	1				
20	95817–08035	BOLT, FLANGE	2	2				
21	4TX–2835U–00–4B	PANEL 1	1	1				UR BL2
	4TX–2835U–00–P5	PANEL 1	1	1				UR SM1
	4TX–2835U–00–7M	PANEL 1	1	1				UR MDS FOR VRC7
22	4TX–28328–70	EMBLEM	1	1				UR FOR BL2
	4TX–28328–80	EMBLEM	1	1				UR FOR SM1

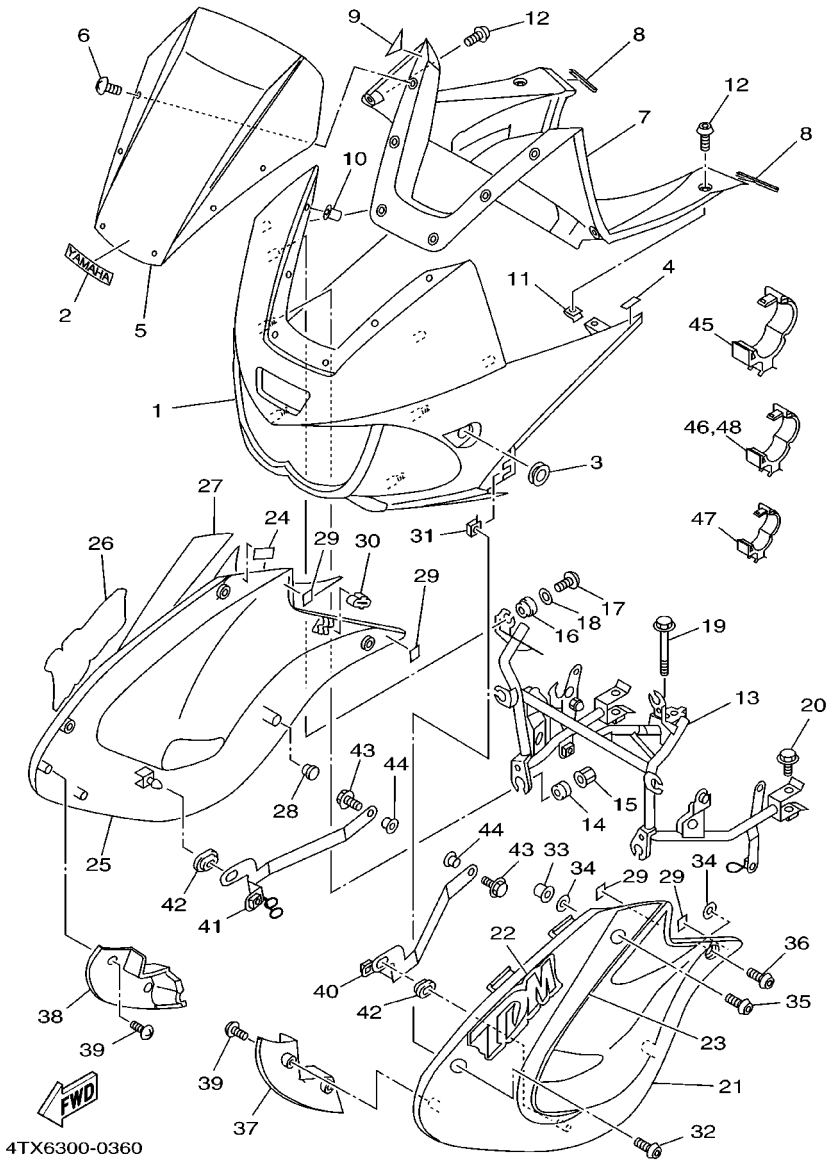

FIG. 36 COWLING 1

REF. NO.	PART NO.	DESCRIPTION	4TX6	4TX7				REMARKS
22	4TX–28328–50	EMBLEM	1	1				UR FOR VRC7
23	4TX–28301–00	GRAPHIC SET, LOWER COVER 1	1	1				UR FOR BL2
	4TX–28301–30	GRAPHIC SET, LOWER COVER 1	1	1				UR FOR SM1
	4TX–28301–10	GRAPHIC SET, LOWER COVER 1	1	1				UR FOR VRC7
24	30X–2139X–00	DAMPER	2	2				
25	4TX–2835V–00–4B	PANEL 2	1	1				UR BL2
	4TX–2835V–00–P5	PANEL 2	1	1				UR SM1
	4TX–2835V–00–7M	PANEL 2	1	1				UR MDS FOR VRC7
26	4TX–28338–70	EMBLEM	1	1				UR FOR BL2
	4TX–28338–80	EMBLEM	1	1				UR FOR SM1
	4TX–28338–50	EMBLEM	1	1				UR FOR VRC7
27	4TX–28303–00	GRAPHIC SET, LOWER COVER 2	1	1				UR FOR BL2
	4TX–28303–30	GRAPHIC SET, LOWER COVER 2	1	1				UR FOR SM1
	4TX–28303–10	GRAPHIC SET, LOWER COVER 2	1	1				UR FOR VRC7
28	90338–10132	PLUG	2	2				
29	2TV–21639–00	DAMPER 2	4	4				
30	15A–21717–00	DAMPER	2	2				
31	90183–05024	NUT, SPRING	2	2				
32	90110–05201	BOLT, HEXAGON SOCKET HEAD	2	2				
33	90179–05523	NUT	2	2				
34	90202–05224	WASHER, PLATE	4	4				
35	90149–05299	SCREW	2	2				
36	90110–05201	BOLT, HEXAGON SOCKET HEAD	2	2				
37	4TX–2837N–00	GRILL, AIR INTAKE 1	1	1				
38	4TX–2837R–00	GRILL, AIR INTAKE 2	1	1				
39	97707–50012	SCREW, TAPPING	4	4				
40	4TX–28321–00	STAY 1	1	1				

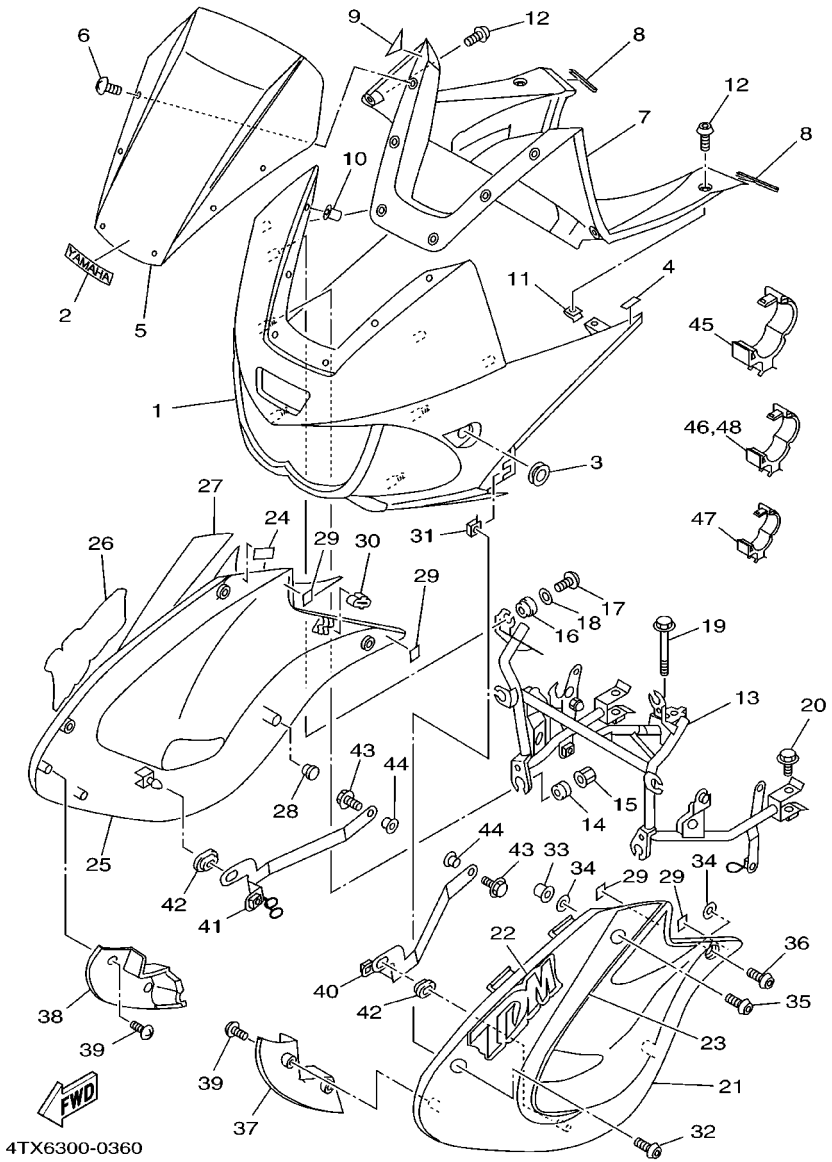

FIG. 36 COWLING 1

REF. NO.	PART NO.	DESCRIPTION	4TX6	4TX7				REMARKS
41	4TX–28322–00	STAY 2	1	1				
42	90480–01558	GROMMET	2	2				
43	95807–06012	BOLT, FLANGE	2	2				
44	90387–0910H	COLLAR	2	2				
45	90464–25217	CLAMP	1	1				
46	90464–20191	CLAMP	2	2				
47	90464–15192	CLAMP	2	2				
48	90464–20191	CLAMP	1	1				

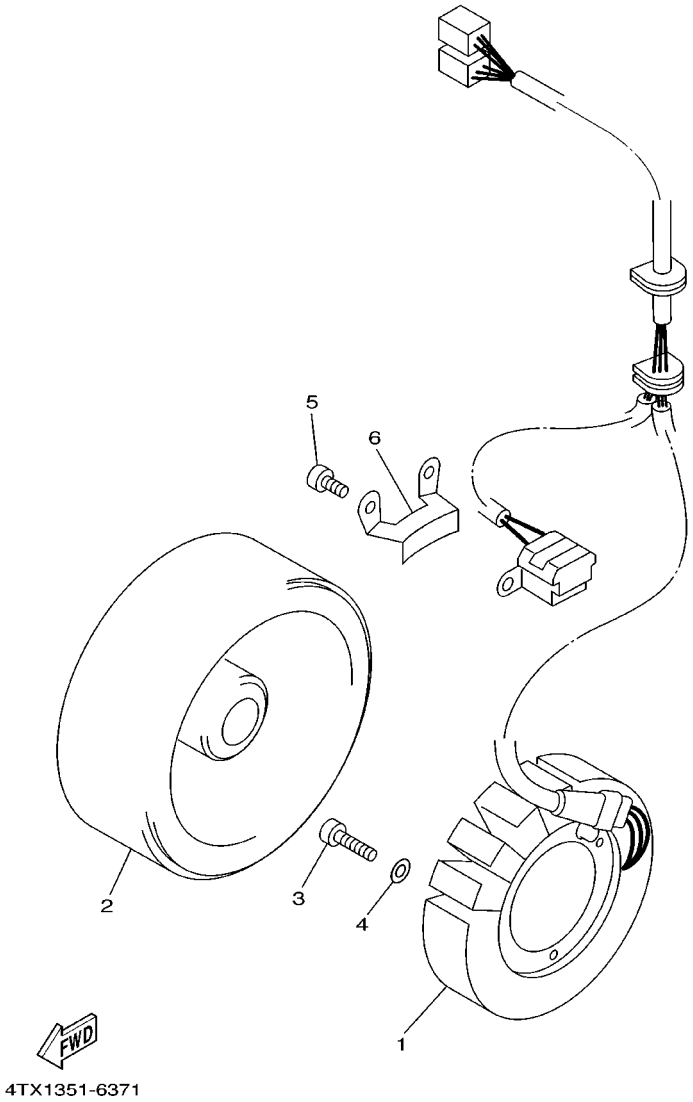

FIG. 37 GENERATOR

REF. NO.	PART NO.	DESCRIPTION	4TX6	4TX7				REMARKS
1	4TX–81410–00	STATOR ASSY	1	1				
2	4TX–81450–00	ROTOR ASSY	1	1				
3	98507–06035	SCREW, PAN HEAD	3	3				
4	92907–06600	WASHER, PLATE	3	3				
5	91317–05016	BOLT	2	2				
6	90465–08380	CLAMP	1	1				

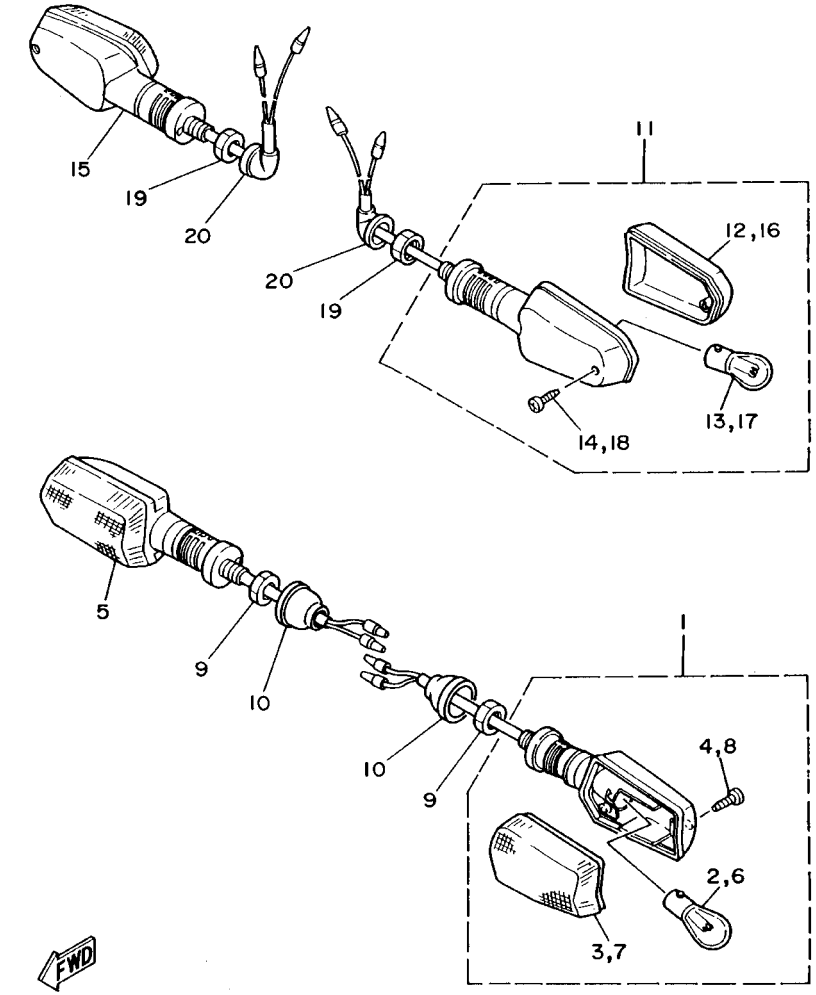

4TX1351-6380

FIG. 38 FLASHER LIGHT

REF. NO.	PART NO.	DESCRIPTION	4TX6	4TX7				REMARKS
1	3GM–83310–00	FRONT FLASHER LIGHT ASSY 1	1	1				
2	306–83311–40	.BULB, FLASHER (12V–21W)	1	1				
3	51L–83332–01	.LENS, FLASHER	1	1				
4	97707–40620	.SCREW, TAPPING	1	1				
5	3GM–83320–00	FRONT FLASHER LIGHT ASSY 2	1	1				
6	306–83311–40	.BULB, FLASHER (12V–21W)	1	1				
7	51L–83342–01	.LENS, FLASHER 2	1	1				
8	97707–40620	.SCREW, TAPPING	1	1				
9	95307–12700	NUT	2	2				
10	10V–83365–00	CAP	2	2				
11	3VD–83330–00	REAR FLASHER LIGHT ASSY 1	1	1				
12	1VU–83332–00	.LENS, FLASHER	1	1				
13	306–83311–40	.BULB, FLASHER (12V–21W)	1	1				
14	97706–40620	.SCREW, TAPPING	1	1				
15	3VD–83340–00	FLASHER LIGHT ASSY 2	1	1				
16	1VU–83342–00	.LENS, FLASHER 2	1	1				
17	306–83311–40	.BULB, FLASHER (12V–21W)	1	1				
18	97706–40620	.SCREW, TAPPING	1	1				
19	95307–12600	NUT	2	2				
20	18G–83365–00	CAP	2	2				

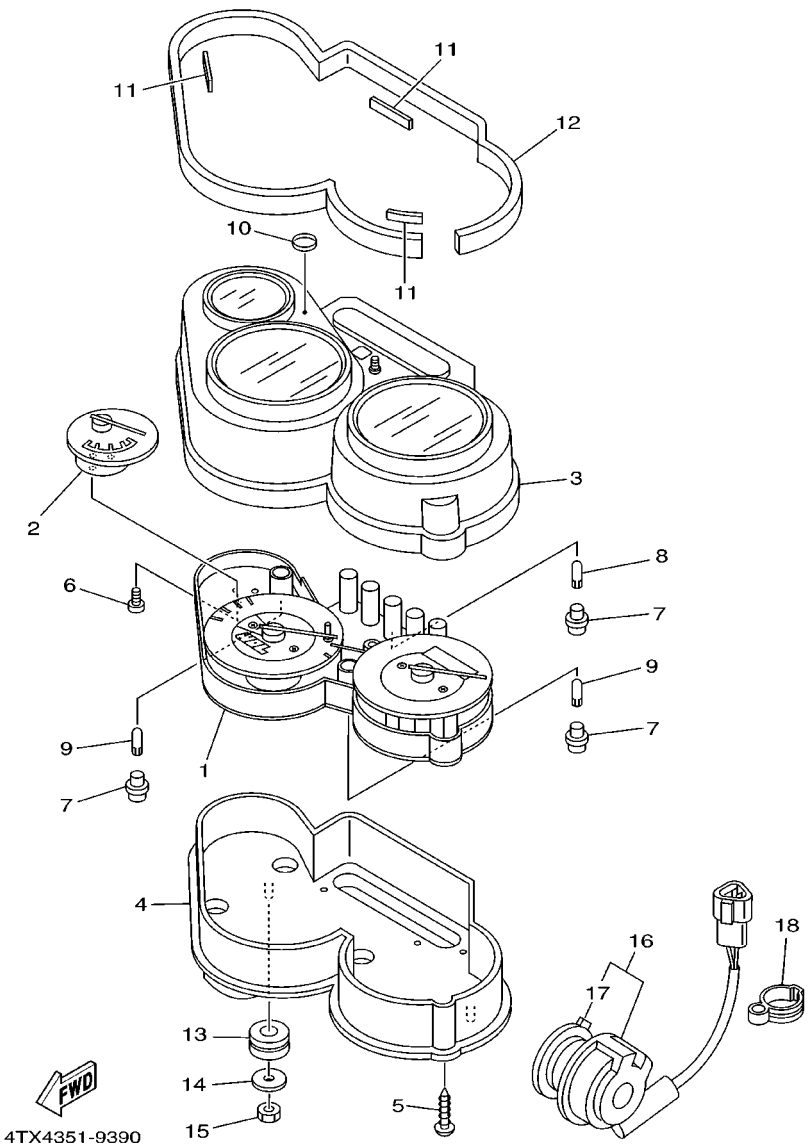

FIG. 39 METER

REF. NO.	PART NO.	DESCRIPTION	4TX6	4TX7				REMARKS
1	5DM–83570–21	SPEEDOMETER ASSY	1	1				UR
	5DM–83570–30	SPEEDOMETER ASSY	1					UR FOR GBR
2	4YR–85750–01	FUEL METER ASSY	1	1				
3	5DM–8353E–21	CASE, METER UPPER	1	1				
4	4YR–83572–00	CASE, SPEEDOMETER LOWER	1	1				
5	97707–40018	SCREW, TAPPING	7	7				
6	4YR–8362Y–00	SCREW, SPECIAL	3	3				
7	4YR–83534–00	SOCKET, NEUTRAL	9	9				
8	4YR–83517–00	BULB (12V–1.4W T5)	5	5				
9	4YR–83517–10	BULB (12V–2W T5)	4	4				
10	4XV–2341B–00	EMBLEM	1	1				
11	4TX–83526–40	DAMPER 2	3	3				
12	4TX–83523–40	DAMPER	1	1				
13	90480–14585	GROMMET	3	3				
14	90201–06380	WASHER, PLATE	3	3				
15	95307–06600	NUT	3	3				
16	4TX–83755–41	SENSOR, SPEED	1	1				
17	4TX–2517G–00	.ROTOR, SENSOR	1	1				
18	90465–14310	CLAMP	3	3				

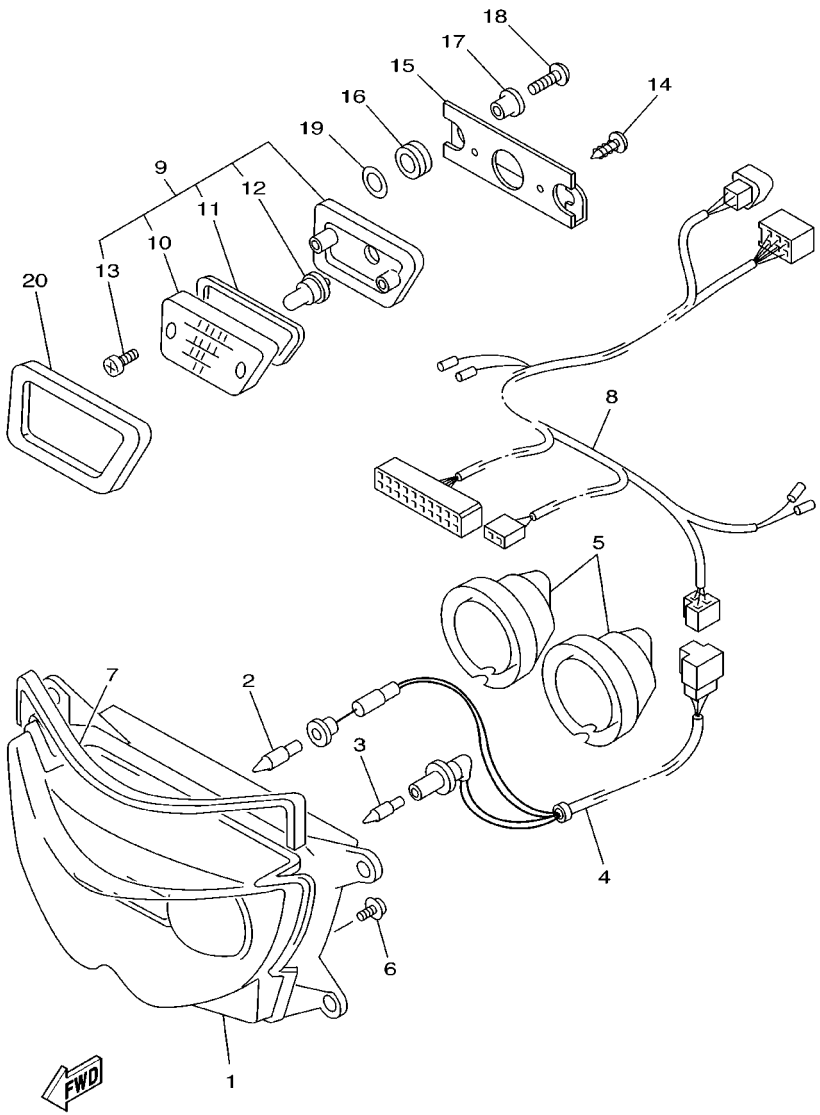

4TX4351-9400

FIG. 40 HEADLIGHT

REF. NO.	PART NO.	DESCRIPTION	4TX6	4TX7				REMARKS
1	4TX–84320–10	LENS ASSY	1	1				UR
	4TX–84320–00	LENS ASSY	1					UR FOR GBR
2	*	BULB (12V–55W–H3)	1	1				LM HALOGEN
3	*	BULB (12V–55W)	1	1				LM HALOGEN
4	3GM–84340–40	SOCKET CORD ASSY 1	1	1				
5	3GM–84397–40	COVER, SOCKET	2	2				
6	3TJ–84351–00	SCREW	1	1				
7	4TX–84163–00	DAMPER	1	1				
8	4TX–84359–10	CORD, HEADLIGHT	1	1				
9	3GM–84301–00	PILOT LIGHT ASSY 1	1	1				
10	3GM–84321–00	.LENS ASSY	1	1				
11	3GM–84322–00	.GASKET, LENS	1	1				
12	47G–85353–00	.BULB (12V–5W)	1	1				
13	3GM–84192–10	.SCREW, SPECIAL	2	2				
14	90167–05025	SCREW, TAPPING	2	2				
15	4TX–8431R–00	STAY, SETTING	1	1				
16	90480–10517	GROMMET	2	2				
17	90387–052U5	COLLAR	2	2				
18	90167–05037	SCREW, TAPPING	2	2				
19	90201–054K4	WASHER, PLATE	2	2				
20	3GM–84367–50	DAMPER, HEADLIGHT 2	1	1				

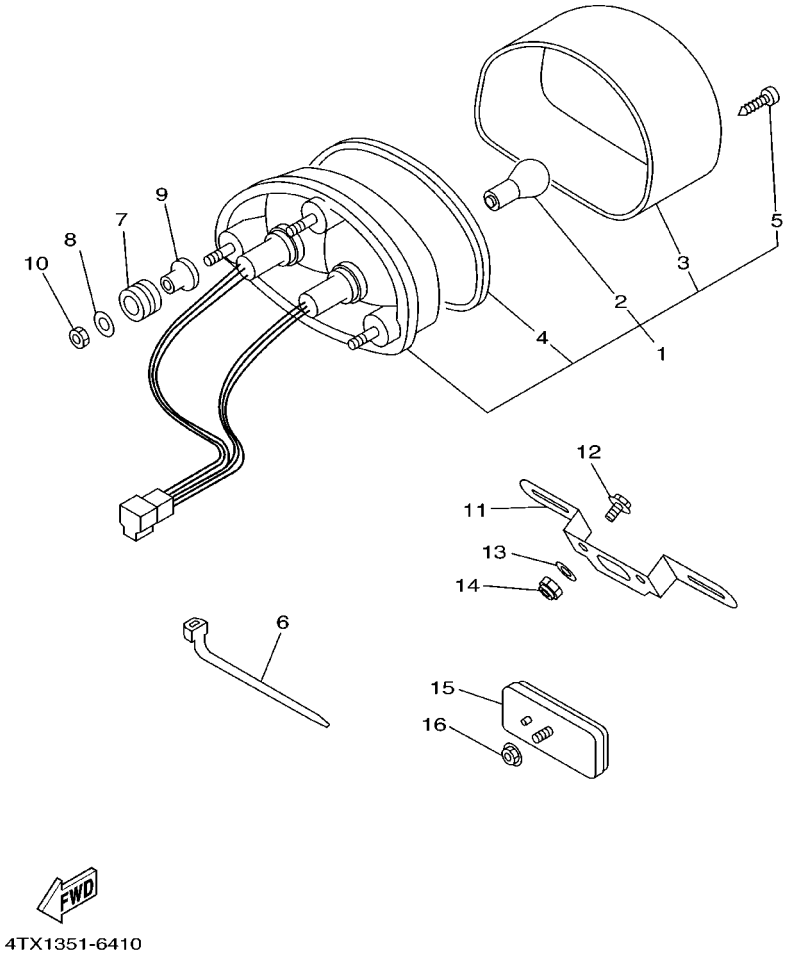

FIG. 41 TAILLIGHT

REF. NO.	PART NO.	DESCRIPTION	4TX6	4TX7				REMARKS
1	4TX–84710–00	TAILLIGHT UNIT ASSY	1	1				
2	31L–84714–00	.BULB, TAILLIGHT (12V–21/5W)	2	2				
3	4TX–84733–00	.LENS, TAILLIGHT	1	1				
4	4TX–84723–00	.GASKET, TAIL LENS	1	1				
5	97706–40620	.SCREW, TAPPING	2	2				
6	90464–13077	CLAMP	1	1				
7	90480–18276	GROMMET	3	3				
8	90201–06071	WASHER, PLATE	3	3				
9	90387–077M3	COLLAR	3	3				
10	95307–06600	NUT	3	3				
11	4TX–84751–00	BRACKET, LICENSE	1	1				
12	95027–06014	BOLT, FLANGE	2	2				
13	90201–06057	WASHER, PLATE	2	2				
14	95607–06100	NUT, U	2	2				
15	3Y6–85130–02	REAR REFLECTOR ASSY	1	1				UR
	4KM–85130–00	REAR REFLECTOR ASSY	1					UR FOR FIN,NOR,SWE
16	95707–05500	NUT, FLANGE	1	1				

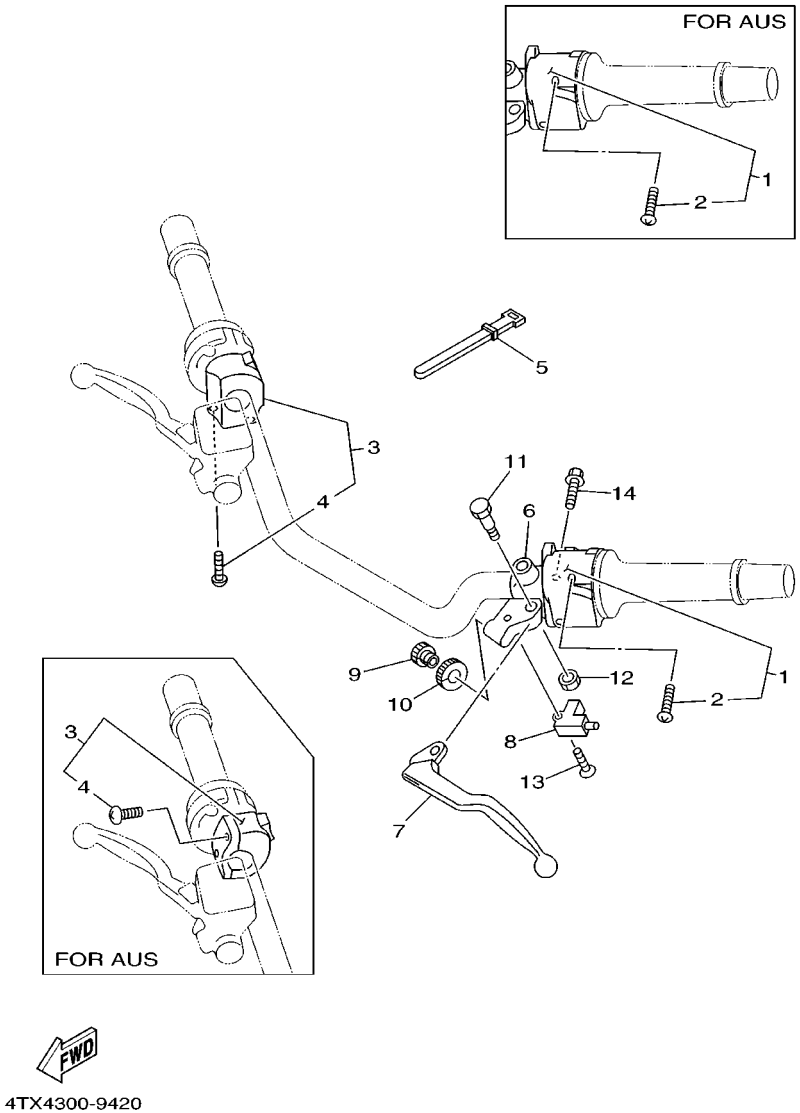

FIG. 42 HANDLE SWITCH. LEVER

REF. NO.	PART NO.	DESCRIPTION	4TX6	4TX7				REMARKS
1	4TX–83969–40	SWITCH, HANDLE 5	1					
	4TX–83972–00	SWITCH, HANDLE 4		1				
2	98507–05025	.SCREW, PAN HEAD	2	2				
3	4TX–83963–40	SWITCH, HANDLE 3 (RIGHT)	1					
	4TX–83975–00	SWITCH, HANDLE 2		1				
4	98507–05045	.SCREW, PAN HEAD	2					
	98507–05022	.SCREW, PAN HEAD		2				
5	437–83936–01	BAND, SWITCH CORD	2	2				
6	3YX–82911–01	HOLDER, LEVER 1	1	1				
7	3YX–83912–00	LEVER 1	1	1				
8	3YX–82917–00	SWITCH	1	1				
9	90123–08096	BOLT	1	1				
10	90179–08148	NUT	1	1				
11	3YX–83945–00	BOLT, LEVER	1	1				
12	95607–06100	NUT, U	1	1				
13	98707–03020	SCREW, FLAT HEAD	1	1				
14	95027–06020	BOLT, FLANGE	1	1				

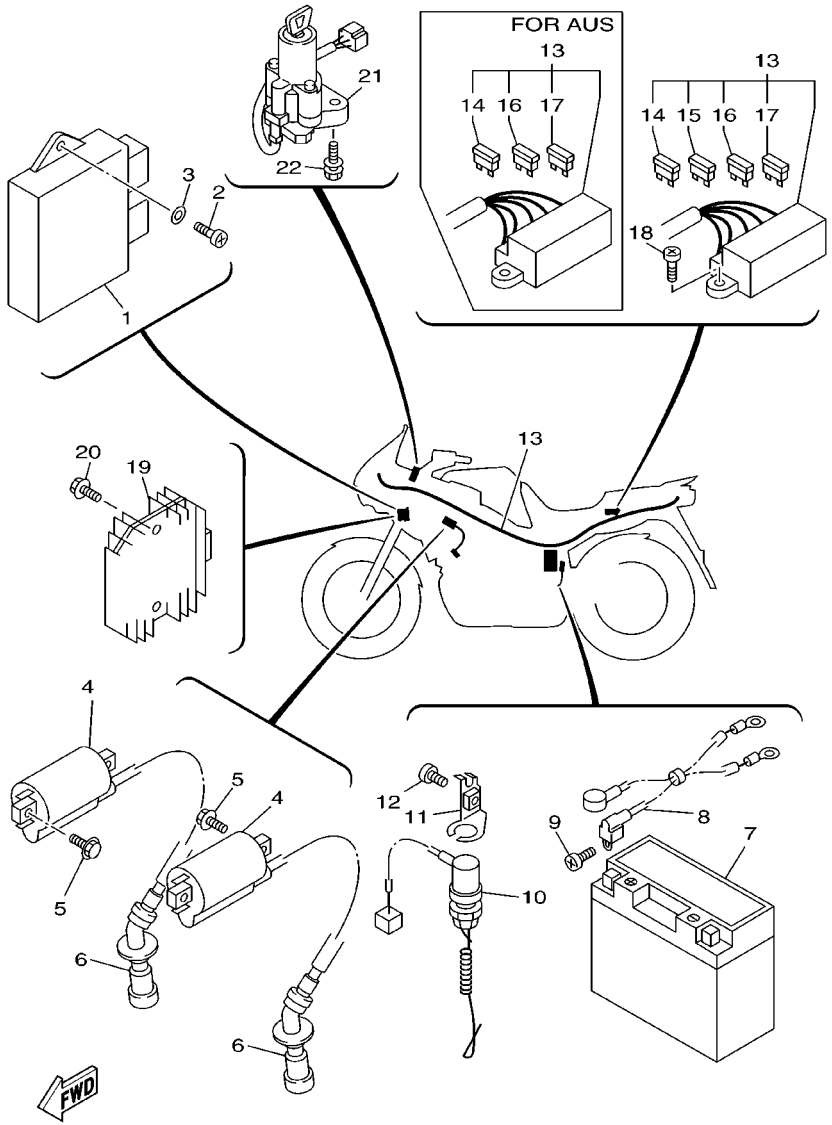

FIG. 43 ELECTRICAL 1

REF. NO.	PART NO.	DESCRIPTION	4TX6	4TX7				REMARKS
1	4TX–82305–40	IGNITOR UNIT ASSY	1	1				
2	98507–06016	SCREW, PAN HEAD	2	2				
3	92907–06600	WASHER, PLATE	2	2				
4	3TB–82310–00	IGNITION COIL ASSY	2	2				
5	91317–05016	BOLT	4	4				
6	3LD–82370–00	PLUG CAP ASSY	2	2				
7	4TX–82100–01	BATTERY ASSY (GT12B–4)	1	1				
8	4TX–82509–00	WIRE, SUB LEAD	1	1				
9	98507–06008	SCREW, PAN HEAD	1	1				
10	4TX–82530–00	STOP SWITCH ASSY	1	1				
11	4TX–82539–00	STAY, STOP SWITCH	1	1				
12	92014–06010	BOLT, BUTTON HEAD	1	1				
13	4TX–82590–40	WIRE HARNESS ASSY	1					
	4TX–82590–50	WIRE HARNESS ASSY		1				
14	36Y–82151–00	.FUSE (15A–BL)	3					
	36Y–82151–00	.FUSE (15A–BL)		4				
15	42X–82151–00	.FUSE (10A–BL)	3					
16	1NL–82151–00	.FUSE (5A–BL)	2	2				
17	2KW–82151–00	.FUSE (7.5A–BL)	2	2				
18	98907–06012	SCREW, BIND	2	2				
19	4JH–81960–01	RECTIFIER & REGULATOR ASSY	1	1				
20	95807–06020	BOLT, FLANGE	2	2				
21	4JH–82501–04	MAIN SWITCH STEERING LOCK	1					
	4NA–82501–02	MAIN SWITCH STEERING LOCK		1				
22	90109–080G5	BOLT	2	2				

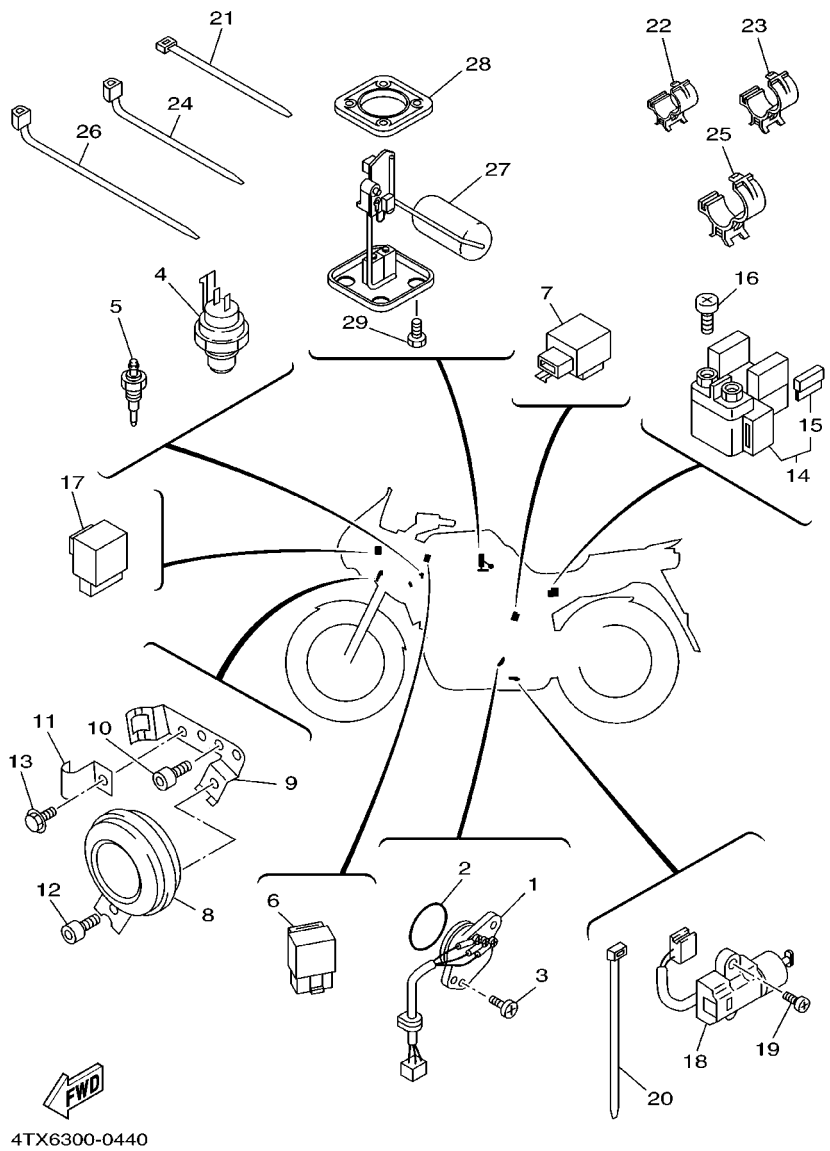

FIG. 44 ELECTRICAL 2

REF. NO.	PART NO.	DESCRIPTION	4TX6	4TX7				REMARKS
1	4TX–82540–40	NEUTRAL SWITCH ASSY	1	1				
2	93210–29196	O–RING	1	1				
3	98507–06016	SCREW, PAN HEAD	2	2				
4	3LN–82560–01	THERMO SWITCH ASSY	1	1				
5	3YX–82560–00	THERMO SWITCH ASSY	1	1				
6	4KM–81950–00	RELAY ASSY	1					
7	3GM–83350–01	FLASHER RELAY ASSY	1	1				
8	4KM–83371–00	HORN	1	1				
9	4TX–23377–00	BRACKET, HORN	1	1				
10	91317–06014	BOLT	2	2				
11	4TX–23378–00	BRACKET, HORN	1	1				
12	91317–06010	BOLT	1	1				
13	95807–06010	BOLT, FLANGE	1	1				
14	4DN–81940–00	STARTER RELAY ASSY	1	1				
15	1AE–82151–00	.FUSE (30A–BL)	2	2				
16	98507–06008	SCREW, PAN HEAD	2	2				
17	3EN–81950–00	RELAY ASSY	1	1				
18	3LD–82566–50	SWITCH, SIDE STAND	1	1				
19	90157–05079	SCREW, PAN HEAD	2	2				
20	25G–83936–01	BAND, SWITCH CORD	2	2				
21	90464–25217	CLAMP	11	11				
22	90464–10190	CLAMP	6	6				
23	90464–15192	CLAMP	5	5				
24	90464–13073	CLAMP	1	1				
25	90464–20191	CLAMP	1	1				
26	90464–15195	CLAMP	1	1				
27	4TX–85752–40	SENDER UNIT ASSY, FUEL METER	1	1				

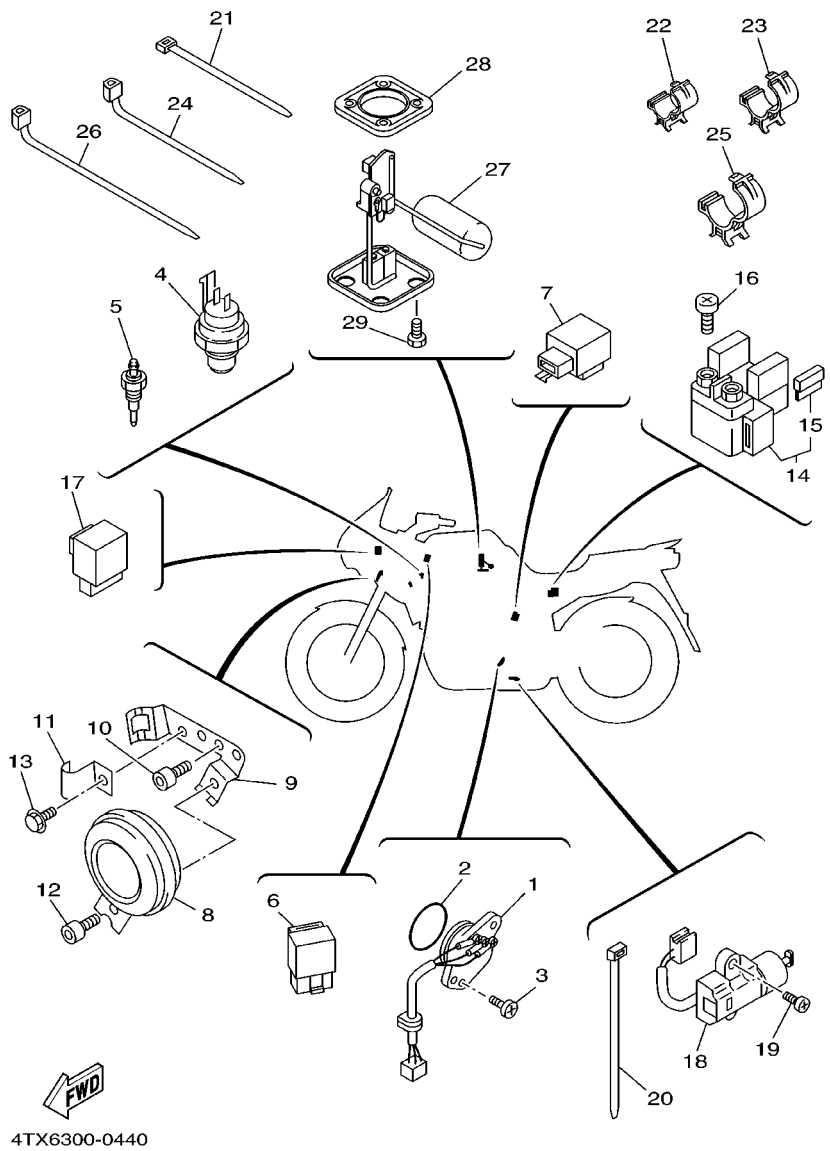

FIG. 44 ELECTRICAL 2

REF. NO.	PART NO.	DESCRIPTION	4TX6	4TX7				REMARKS
28	4TX–85753–00	GASKET, SENDER UNIT	1	1				
29	90119–05071	BOLT, WITH WASHER	4	4				

NUMERICAL INDEX

PART NO.	GRID NO.
4BH–W0041–00	E – 11
3VD–W0042–50	E – 15
3GM–W0045–03	E – 6
4SV–W0045–50	E – 9
3HE–W0047–50	E – 6
31A–W0047–00	E – 9
1J3–W0048–00	E – 6
	E – 9
3HE–W0057–50	E – 6
31A–W0057–00	E – 9
3YX–W0091–02	E – 11
3VD–W2165–00	D – 10
4TX–W2587–00	E – 11
4NX–Y1119–10	B – 2
4UN–Y1242–00	B – 9
3VD–Y2151–10–P4	D – 5
3VD–Y2151–10–P9	D – 5
3VD–Y2151–10–7M	D – 5
3VD–Y2161–G0	D – 5
3VD–Y2161–01	D – 5
4TX–Y2410–50–02	D – 15
4TX–Y2410–50–04	D – 15
4TX–Y2410–50–05	D – 15
3VD–11101–20	B – 2
2GH–1111G–00	B – 2
3LD–11133–10	B – 2
3LD–11134–10	B – 2
3LD–11160–02	B – 2
4TX–11166–01	C – 2
4NX–11181–00	B – 2
3LD–11193–01	B – 2
214–11198–01	B – 13
4UN–11310–00	B – 3
3VD–11351–00	B – 3
3LD–11361–00	C – 7
4NX–11400–00	B – 4
3LD–11416–00	B – 4
3LD–11416–10	B – 4
3LD–11416–20	B – 4
3LD–11416–30	B – 4
3LD–11416–40	B – 4
3LD–11416–50	B – 4
3LD–11416–60	B – 4
4NX–11500–00	B – 4
4NX–11510–00	B – 4
3LD–11583–00	B – 4
3LD–11584–00	B – 4
3VD–11610–00	B – 4

PART NO.	GRID NO.
3VD–11610–20	B – 4
3VD–11610–40	B – 4
4NX–11631–00	B – 4
3LD–11633–00	B – 4
4NX–11636–00	B – 4
4NX–11638–00	B – 4
3VD–11650–00	B – 4
3LD–11654–00	B – 4
3LD–11656–00	B – 4
3LD–11656–10	B – 4
3LD–11656–20	B – 4
3LD–11656–30	B – 4
3LD–12111–01	B – 6
3LD–12112–01	B – 6
3LD–12113–00	B – 6
1WG–12116–00	B – 6
3LD–12117–00	B – 6
3LD–12118–00	B – 6
51Y–12119–00	B – 6
3LD–12121–00	B – 6
1WG–12153–21	B – 6
1WG–12153–31	B – 6
3LD–12168–A0	B – 6
3LD–12168–F0	B – 6
3LD–12168–H1	B – 6
3LD–12168–K1	B – 6
3LD–12168–M1	B – 6
3LD–12168–R1	B – 6
3LD–12168–U1	B – 6
3LD–12168–W1	B – 6
3LD–12168–Y1	B – 6
3LD–12168–00	B – 6
3LD–12168–20	B – 6
3LD–12168–40	B – 6
3LD–12168–60	B – 6
3LD–12168–80	B – 6
3LD–12169–E0	B – 7
3LD–12169–G0	B – 7
3LD–12169–J0	B – 7
3LD–12169–L0	B – 7
3LD–12169–N0	B – 7
3LD–12169–T0	B – 7
3LD–12169–11	B – 6
3LD–12169–31	B – 6
3LD–12169–50	B – 6
3LD–12169–70	B – 7
3LD–12169–90	B – 7
4NX–12171–00	B – 8

PART NO.	GRID NO.
3LD–12176–00	B – 8
4NX–12181–00	B – 8
3LD–12210–00	B – 8
3VD–12213–00	B – 8
3YL–12232–00	D – 4
3LD–12241–00	B – 8
3LD–12247–00	B – 8
3LD–12251–00	B – 8
3LD–12252–00	B – 8
4TX–12405–00	B – 10
1AE–12410–00	B – 11
4NX–12413–00	B – 11
4TX–12417–40	B – 11
4TX–1243A–40	C – 4
4TX–1243F–40	C – 4
1AA–12435–00	B – 10
1UF–12435–00	B – 10
1KT–12437–00	B – 10
3LD–12439–00	B – 9
4TX–1244E–00	B – 11
3VD–12459–00	B – 9
4TX–12461–40	B – 10
4FL–12462–00	B – 10
3VD–12465–00	B – 10
4TX–12465–00	B – 10
1UF–12467–00	B – 10
4UN–12469–00	B – 9
3LD–12481–00	B – 9
4NX–12482–00	B – 10
1AA–12561–00	B – 10
4TX–12576–40	B – 11
4TX–12578–00	B – 10
4NX–12579–00	B – 11
1UF–12611–00	B – 10
26H–12630–00	B – 10
3LD–13113–00	B – 13
4TX–13132–00	B – 14
3LD–13151–00	B – 13
3LD–13161–00	B – 12
4TX–13266–00	B – 14
3LD–13300–00	B – 12
4NX–13303–00	B – 12
3VD–13317–00	B – 14
3VD–13325–00	B – 12
3LD–13329–00	B – 12
3LD–13339–00	B – 12
3LD–13371–00	B – 12
3VD–13411–00	B – 12

PART NO.	GRID NO.
3VD–13412–00	B – 12
3VD–13414–00	B – 13
3VD–13415–00	B – 12
3VD–13416–00	B – 13
4TX–13416–00	B – 14
3VD–13417–10	B – 13
4NX–13418–00	B – 14
4X7–13440–01	B – 12
3VD–13447–00	B – 12
4UN–13464–01	B – 13
4TX–13465–00	B – 13
4TX–13467–00	B – 14
11H–13490–00	B – 13
3LD–13586–01	B – 15
3LD–13597–01	B – 15
4TX–13907–40	E – 2
4SV–1410A–00	C – 3
4TX–14103–40	C – 4
5DM–14105–00	C – 3
4KM–14107–15	C – 3
4SV–14112–00	C – 3
4KM–14142–17	C – 3
36Y–14147–00	C – 4
4TX–14148–00	C – 4
4TX–14148–10	C – 4
4TX–14148–40	C – 5
620–14186–00	C – 3
4KP–14191–00	C – 3
3JD–14197–00	C – 4
3JE–14197–00	C – 4
4KM–14216–00	C – 4
1HX–1423A–68	C – 3
3G2–1423A–80	C – 3
1HX–14231–24	C – 3
4HM–14239–00	C – 4
4TX–14261–00	C – 3
4TX–14264–00	C – 4
4TX–14275–00	C – 3
4TX–14294–40	E – 2
4NK–14327–00	C – 4
4TX–14348–00	C – 4
4TX–14349–00	C – 4
4TX–14411–40	B – 15
4TX–14419–00	C – 4
3VD–1442G–00	B – 15
3VD–14421–00	B – 15
3VD–14422–00	B – 15
4TX–14425–40	B – 15

PART NO.	GRID NO.
4TX–14426–40	B – 15
1AE–14451–00	B – 15
1AE–14452–00	B – 15
4BR–14452–00	B – 15
4TX–14453–40	B – 15
4TX–14479–00	C – 3
1FN–14565–00	C – 3
4WM–14565–00	C – 4
4XY–14589–00	C – 4
4TX–14602–01	C – 6
3VD–14613–00	C – 6
4TX–14710–41	C – 6
3VD–14755–00	C – 6
4TX–1490J–40	C – 3
4TX–1490J–50	C – 3
3EN–1490K–00	C – 4
4TX–14900–40	C – 3
4TX–14901–40	C – 3
4TX–14902–40	C – 3
5DM–14919–00	C – 4
4SV–14935–00	C – 4
5AP–14940–00	C – 4
4SV–14968–00	C – 3
4SV–14985–00	C – 3
4SV–14987–00	C – 4
3VD–15100–23	C – 7
3LD–15118–00	C – 8
2H7–15138–00	C – 7
4G0–15138–00	C – 7
4H7–15138–00	B – 13
3LD–15163–10	C – 14
3LD–15191–00	C – 8
3VD–15199–00	C – 7
3VD–15316–00	C – 7
3VD–15317–00	C – 7
3VD–15326–00	C – 9
3VD–15335–00	C – 9
3F9–15362–00	B – 14
3VD–15411–11	C – 9
3LD–15414–00	C – 15
3VD–15416–10	C – 8
3VD–15417–01	C – 9
3LD–15418–00	C – 9
3VD–15420–01	C – 9
4UN–15425–01	C – 9
4UN–15426–00	C – 10
4UN–15430–00	C – 9
3LD–15449–00	C – 9

PART NO.	GRID NO.
3VD–15451–00	C – 9
3VD–15456–00	C – 8
4NX–15461–00	C – 10
4NX–15462–01	C – 9
3VD–15463–00	C – 10
1JK–15486–00	C – 9
3LD–15512–00	C – 11
4NX–15515–00	C – 11
3LD–15517–00	C – 11
26H–15521–00	C – 11
3LD–15590–02	C – 11
4TX–16150–01	C – 12
3VD–16154–00	C – 13
4H7–16154–00	C – 12
3VD–16164–00	C – 12
4NX–16181–00	C – 13
4H7–16321–02	C – 12
4TX–16321–00	C – 12
3J2–16324–00	C – 12
4TX–16340–40	C – 12
3LD–16351–00	C – 12
3LD–1637A–01	C – 12
4TX–16371–00	C – 12
3LD–16382–00	C – 12
3LD–16398–00	C – 12
4TX–17121–40	C – 14
4TX–17131–40	C – 14
2GH–17141–00	C – 14
4TX–17151–40	C – 14
4TX–17211–40	C – 14
4TX–17231–40	C – 14
4NX–17241–00	C – 14
4TX–17251–40	C – 14
4TX–17402–40	C – 14
4TX–17411–40	C – 14
4NX–17471–00	C – 15
3LD–18101–02	D – 3
3VD–18110–10	D – 3
132–18113–01	D – 3
22N–18113–00	E – 15
3VD–18115–00	D – 3
4G0–18127–00	D – 3
3LD–18130–00	D – 3
4SV–18140–00	D – 2
2H9–18154–00	D – 3
4NX–18175–00	D – 2
3VD–18511–00	D – 2
3VD–18512–00	D – 2

NUMERICAL INDEX

PART NO.	GRID NO.
3VD–18513–00	D – 2
4NX–18531–00	D – 2
4NX–18535–00	D – 2
3LD–18536–00	D – 2
4TX–18540–40	D – 2
4UN–18542–00	D – 2
4UN–18566–00	D – 2
4TX–21110–40–35	D – 4
4TX–21161–00	D – 4
3VD–21164–00	D – 4
4TX–2117E–00	D – 6
4KB–21268–00	D – 4
	D – 6
46X–21269–00	D – 6
4TX–2135F–01	D – 4
3VD–21366–00	D – 5
4TX–21376–00	E – 4
3VD–2139X–00	E – 14
30X–2139X–00	E – 2
	F – 4
3VD–21411–10–35	D – 4
4TX–21419–00–35	D – 4
3LD–2143A–00	D – 4
3VD–2143A–00	D – 4
4TX–2148U–40	D – 4
3VD–21489–00	D – 4
4X7–2149Y–00	E – 2
3GM–21512–00	D – 5
3FY–21575–01	D – 5
4TX–2161A–00	D – 6
3LD–21621–01	D – 7
50M–21638–00	D – 8
2MG–21639–00	D – 5
2TV–21639–00	F – 4
51Y–21639–00	D – 8
	D – 9
3VD–2164F–00	D – 10
3VD–21645–00–PA	D – 6
3VD–21645–00–P6	D – 6
3VD–21645–00–4B	D – 6
4TX–21649–00	F – 3
4TX–21651–00–P2	D – 6
4TX–21651–00–P5	D – 6
4TX–21651–00–4B	D – 6
4TX–21652–01	D – 9
3YX–2171L–00	D – 4
4TX–21711–00	D – 8
15A–21717–00	F – 4

PART NO.	GRID NO.
4TX–21717–00	F – 3
4TX–21721–00	D – 9
4TX–2173M–00	D – 8
4TX–21732–00	D – 8
4TX–21735–00	D – 8
11H–21747–00	D – 4
3Y6–21747–00	D – 8
4TX–2177G–00	D – 8
4TX–21781–A0	D – 5
	D – 6
4TX–21781–B0	D – 5
	D – 6
4TX–21781–80	D – 6
1AA–21815–00	D – 8
3VD–21816–00	D – 8
3VD–21871–00	D – 8
1AA–21874–00	D – 8
4TX–22110–00	D – 10
4X7–22129–00	D – 10
46X–22141–00	D – 10
3VD–22151–00	D – 10
3HE–22174–00	E – 7
33M–22184–00	D – 10
4TX–22210–00	D – 11
3VD–22216–00	D – 11
3VD–22311–00	D – 10
3VD–22464–00	D – 11
4TX–23102–01	D – 13
4TX–23103–01	D – 13
4TX–2311G–00	D – 13
	D – 14
4TX–2311H–00	D – 13
	D – 14
4TX–23110–00	D – 13
4TX–23115–00	D – 13
	D – 14
4KM–23123–01	D – 14
4TX–23125–A0	D – 13
	D – 14
4TX–23126–01	D – 13
4TX–23135–A0	D – 13
4TX–23136–01	D – 13
4TX–23141–00	D – 13
	D – 14
4TX–23144–00	D – 13
	D – 14
4TX–23145–00	D – 13
	D – 14

PART NO.	GRID NO.
4TX–23151–00	D – 13
	D – 14
4TX–23156–00	D – 13
	D – 14
4TX–23157–00	D – 13
	D – 14
4TX–23170–00	D – 13
	D – 14
4TX–23173–00	D – 13
	D – 14
4TX–2319K–00	D – 13
	D – 14
4TX–2331E–00	D – 12
4TX–2331G–00	D – 13
	D – 14
4TX–2331L–00	D – 13
	D – 14
4YR–23317–00	E – 6
4TX–23340–00	D – 14
4TX–23377–00	F – 13
4TX–23378–00	F – 13
4TX–23389–00	D – 12
4XV–2341B–00	F – 8
1W1–23416–00	D – 12
26H–23418–01	D – 12
4TX–23435–00	D – 12
4H7–23441–00–P0	D – 12
3FV–23462–00	D – 12
4TX–2411K–00	D – 15
3VD–24181–00	D – 15
4N0–24181–00	B – 15
3Y6–24183–00	D – 15
47X–24183–00	D – 15
2GH–24184–00	D – 15
12R–24186–00	D – 15
47X–24186–00	D – 15
4TX–24191–00	D – 15
4TX–24192–00	D – 15
4TX–24240–A0	D – 15
4TX–24240–B0	D – 15
4TX–24240–80	D – 15
4TX–24311–40	E – 2
4TX–24315–40	E – 2
4SV–24411–00	C – 3
4XV–24453–00	C – 4
3CV–24491–10	E – 2
4KM–24500–10	D – 15
4X8–24512–00	D – 15

PART NO.	GRID NO.
4TX–2452E–40	E – 2
3AJ–24523–00	D – 15
3AJ–24534–00	D – 15
1FK–24560–00	E – 2
1FK–24566–00	E – 2
4FM–24602–10	E – 2
4BH–24705–00	E – 4
4TX–2471K–00–P2	D – 5
4TX–2471K–00–P5	D – 5
4TX–2471K–00–4B	D – 5
4TX–24718–00	E – 4
4TX–2472K–00–P2	D – 6
4TX–2472K–00–P5	D – 6
4TX–2472K–00–4B	D – 6
509–24724–00	E – 4
4TX–24728–00	E – 4
4TX–24730–01	E – 4
4TX–24731–00	E – 4
22W–24741–00	E – 4
4TX–24748–00	E – 4
4TX–24776–01	E – 4
4TX–2478F–00	E – 4
47X–24796–00	E – 4
3VD–25168–00–7B	E – 5
4TX–2517G–00	F – 8
3GM–25181–03	E – 5
3VD–25338–00–7B	E – 7
4TX–25364–40	E – 7
1AE–25366–00	E – 7
3AJ–25381–01	E – 7
4BP–25388–00	E – 7
29L–25398–00	E – 5
	E – 7
29L–25398–10	E – 5
	E – 7
29L–25398–20	E – 5
	E – 7
4TX–25443–40	E – 7
3HE–2580T–70	E – 6
3HE–2580U–70	E – 6
4TX–2580W–00	E – 9
4HM–2581T–01	E – 6
3VD–25819–00	E – 9
3LN–2582A–00	E – 15
3VD–2582E–10	E – 15
4HM–2582W–00	E – 9
1FK–25827–00	E – 9
1FK–25828–00	E – 9

PART NO.	GRID NO.
3YX–2583H–00	E – 11
4TX–2583V–00	E – 15
1KT–25836–00	E – 6
42H–25836–00	E – 9
3YX–25838–00	E – 11
3LN–2585F–00	E – 15
3LN–2585H–00	E – 15
2KF–25852–50	E – 15
4TX–25852–00	E – 11
3YX–25854–00	E – 11
360–25854–01	E – 15
2GU–25855–00	E – 15
3YX–25866–00	E – 11
3YX–25866–10	E – 11
3YX–25867–00	E – 11
4TX–25871–00	E – 11
3VD–25872–51	E – 15
4TX–25872–40	E – 11
4TX–25874–00	E – 11
3VD–25875–01	D – 10
4TX–25875–00	E – 12
3YX–25880–00	E – 11
3LC–25885–00	F – 2
3YX–2589F–00	E – 11
47X–25894–00	E – 15
3VD–25895–01	E – 15
29L–25919–00	E – 9
3GM–25919–00	E – 6
3HE–25924–00	E – 6
	E – 9
3GM–25925–00	E – 6
	E – 9
3VD–26111–20	E – 10
4TX–26131–10	E – 12
3FH–26240–00	E – 10
1KG–26241–00	E – 10
51J–26246–01	E – 10
3VP–26261–00	E – 10
4TX–26280–41	E – 10
3XW–26281–01	E – 10
3XW–26282–01	E – 10
4TX–26290–41	E – 10
4TX–26292–00	E – 10
4TX–26302–40	E – 10
4TX–26331–40	E – 10
4TX–26334–40	E – 10
4TX–26335–01	E – 10
3VD–27211–00	E – 15

PART NO.	GRID NO.
3VD–27212–00	E – 15
47X–27222–00	E – 15
3VD–27311–01	E – 13
3VD–27315–00	E – 13
1TX–27351–00	E – 13
1UA–27410–00	E – 13
4TX–27412–00	E – 14
2GH–27413–00	E – 14
46X–27413–00	E – 13
3VD–27414–00	E – 13
1UA–27420–00	E – 13
4TX–27422–00	E – 14
1NL–27424–00	E – 13
36Y–27424–00	E – 14
4BR–27431–00	E – 13
2YK–27434–01	D – 3
1HX–27437–00	E – 13
4BR–27441–00	E – 13
3VD–27442–11	E – 13
3VD–27443–11	E – 13
4TX–28100–00	D – 7
4TX–28301–00	F – 4
4TX–28301–10	F – 4
4TX–28301–30	F – 4
4TX–28303–00	F – 4
4TX–28303–10	F – 4
4TX–28303–30	F – 4
4TX–28321–00	F – 4
4TX–28322–00	F – 5
4TX–28328–50	F – 4
4TX–28328–70	F – 3
4TX–28328–80	F – 3
4TX–28338–50	F – 4
4TX–28338–70	F – 4
4TX–28338–80	F – 4
4TX–28345–00	F – 3
4TX–2835G–00–0X	F – 3
4TX–2835G–00–5X	F – 3
4TX–2835G–00–7X	F – 3
4TX–2835U–00–P5	F – 3
4TX–2835U–00–4B	F – 3
4TX–2835U–00–7M	F – 3
4TX–2835V–00–P5	F – 4
4TX–2835V–00–4B	F – 4
4TX–2835V–00–7M	F – 4
4TX–28356–40	F – 3
4TX–2836K–40	F – 3
4TX–2837N–00	F – 4

NUMERICAL INDEX

PART NO.	GRID NO.
4TX–2837R–00	F – 4
4KM–28371–00	F – 3
4TX–28381–00	F – 3
4TX–81410–00	F – 6
4TX–81450–00	F – 6
3AJ–81801–00	C – 11
3AJ–81809–00	C – 11
3LD–81815–01	C – 11
4XV–8182A–00	C – 11
3AJ–81826–00	C – 11
3AJ–81830–00	C – 11
11H–81844–00	C – 11
1FK–81847–00	C – 11
4G0–81871–00	C – 11
3LD–81890–00	C – 11
4DN–81940–00	F – 13
3EN–81950–00	F – 13
4KM–81950–00	F – 13
4JH–81960–01	F – 12
4TX–82100–01	F – 12
116–82131–00	D – 7
133–82131–00	D – 7
1AE–82151–00	F – 13
1NL–82151–00	F – 12
2KW–82151–00	F – 12
36Y–82151–00	F – 12
42X–82151–00	F – 12
4TX–82305–40	F – 12
3TB–82310–00	F – 12
3LD–82370–00	F – 12
4JH–82501–04	F – 12
4NA–82501–02	F – 12
4TX–82509–00	F – 12
4TX–82530–00	F – 12
4TX–82539–00	F – 12
4TX–82540–40	F – 13
3LN–82560–01	F – 13
3YX–82560–00	F – 13
3LD–82566–50	F – 13
4TX–82590–40	F – 12
4TX–82590–50	F – 12
1UA–82591–00	E – 11
3YX–82911–01	F – 11
3YX–82917–00	F – 11
3GM–83310–00	F – 7
306–83311–40	F – 7
3GM–83320–00	F – 7
3VD–83330–00	F – 7
1VU–83332–00	F – 7
51L–83332–01	F – 7
3VD–83340–00	F – 7
1VU–83342–00	F – 7
51L–83342–01	F – 7
3GM–83350–01	F – 13
10V–83365–00	D – 11
	F – 7
18G–83365–00	F – 7
4KM–83371–00	F – 13
4YR–83517–00	F – 8
4YR–83517–10	F – 8
4TX–83523–40	F – 8
4TX–83526–40	F – 8
5DM–8353E–21	F – 8
4YR–83534–00	F – 8
5DM–83570–21	F – 8
5DM–83570–30	F – 8
4YR–83572–00	F – 8
4YR–8362Y–00	F – 8
4TX–83755–41	F – 8
3YX–83912–00	F – 11
3YX–83922–00	E – 11
25G–83936–01	F – 13
437–83936–01	F – 11
3YX–83945–00	F – 11
4TX–83963–40	F – 11
4TX–83969–40	F – 11
4TX–83972–00	F – 11
4TX–83975–00	F – 11
4BH–83980–00	E – 11
4TX–84163–00	F – 9
3GM–84192–10	F – 9
3GM–84301–00	F – 9
4TX–8431R–00	F – 9
4TX–84320–00	F – 9
4TX–84320–10	F – 9
3GM–84321–00	F – 9
3GM–84322–00	F – 9
3GM–84340–40	F – 9
3TJ–84351–00	F – 9
4TX–84359–10	F – 9
3GM–84367–50	F – 9
3GM–84397–40	F – 9
4TX–84710–00	F – 10
31L–84714–00	F – 10
4TX–84723–00	F – 10
4TX–84733–00	F – 10
4TX–84751–00	F – 10
3Y6–85130–02	F – 10
4KM–85130–00	F – 10
3HE–85132–01	D – 5
47G–85353–00	F – 9
4YR–85750–01	F – 8
4TX–85752–40	F – 13
4TX–85753–00	F – 14
4TX–85885–00	C – 4
90101–06278	E – 15
90101–06576	C – 6
90101–10659	D – 11
90105–06131	C – 10
90105–06153	B – 2
90105–06397	D – 2
90105–06446	D – 4
90105–06456	B – 13
	C – 9
90105–06477	D – 5
90105–06553	B – 13
	B – 14
90105–06556	D – 12
90105–06557	D – 2
90105–06597	D – 2
90105–07342	B – 8
90105–08752	D – 4
90105–10271	C – 6
90105–10328	D – 4
90105–10560	C – 7
90105–10638	E – 6
	E – 9
90105–12584	B – 5
90109–062G1	B – 2
90109–062G2	B – 2
90109–064F0	B – 2
90109–080G5	F – 12
90109–083E2	E – 13
90109–083G1	D – 4
90109–083G4	E – 6
	E – 9
90109–085E2	D – 7
90109–086A0	D – 15
90109–104E6	E – 13
90109–125F1	D – 11
90110–05112	E – 2
90110–05201	F – 4
90110–06093	B – 14
90110–08071	E – 13
90110–08199	E – 14
90110–10229	D – 4
90116–08548	B – 2
90116–10485	E – 7
90119–05071	F – 14
90119–06044	D – 10
90119–06056	D – 8
90119–06108	D – 10
90123–08096	F – 11
90149–04278	D – 7
90149–05299	F – 4
90149–05321	D – 2
90149–06011	E – 2
90149–06285	C – 8
90149–06286	C – 14
90150–05024	F – 3
90153–06029	B – 3
90157–05079	E – 13
	E – 14
	F – 13
90159–06056	E – 15
90159–06059	D – 9
90159–06093	D – 8
90159–06123	C – 12
90167–05025	F – 9
90167–05037	F – 9
90167–05076	F – 3
90170–06228	D – 3
90170–20327	C – 12
90176–22081	D – 12
90179–05523	F – 3
	F – 4
90179–06500	F – 3
90179–06635	E – 4
90179–08148	F – 11
90179–08345	C – 6
90179–09379	B – 4
90179–10247	E – 13
90179–10377	D – 4
90179–10414	B – 2
90179–18667	C – 15
90179–25033	D – 12
90183–05024	B – 10
	D – 6
	F – 4
90183–05042	F – 3
90183–06023	D – 5
90183–06053	D – 8
90185–10037	E – 13
90185–14112	D – 10
90201–04018	D – 5
90201–047A2	D – 7
90201–052E8	F – 3
90201–054K4	F – 9
90201–06057	F – 10
90201–06063	C – 2
90201–06071	B – 10
	D – 8
	F – 10
90201–06380	F – 8
90201–066F0	C – 7
	C – 8
90201–08083	E – 15
90201–08087	C – 7
90201–08326	C – 6
	D – 3
90201–10118	E – 11
	F – 2
90201–10119	C – 12
90201–103M4	B – 2
90201–10430	D – 4
90201–10437	E – 9
90201–10669	E – 14
90201–11597	C – 7
90201–121H0	B – 5
90201–12163	C – 12
90201–124G9	D – 11
90201–12575	D – 3
90201–127E1	B – 9
90201–150U6	C – 12
90201–160T2	E – 8
90201–161J3	D – 10
90201–170T3	E – 7
90201–191J4	D – 3
90201–200K3	C – 14
90201–20278	C – 15
90201–220T0	D – 12
90201–301P3	C – 11
90202–05193	E – 2
90202–05224	F – 4
90202–24190	D – 12
90202–26142	D – 12
90206–12074	D – 3
90209–05279	C – 9
90209–08295	E – 13
90209–11262	B – 2
90209–21332	C – 14
90209–28330	C – 14
90209–28331	C – 14
90209–29329	C – 14
90215–20231	C – 12
90215–21290	C – 14
90240–08013	E – 15
90267–32071	D – 5
90267–40035	D – 5
90267–40073	D – 5
90267–40105	D – 10
90280–05029	B – 5
90338–05194	B – 15
90338–08163	D – 12
90338–08174	E – 3
90338–10132	F – 4
90338–10150	B – 2
90338–11257	C – 7
90338–12192	D – 5
90340–14132	B – 13
90340–14151	C – 10
90340–18101	B – 2
90340–32116	C – 10
90380–20213	E – 14
90384–18190	D – 11
90387–052U5	F – 9
90387–0614M	B – 10
90387–062L2	E – 2
90387–064H8	E – 14
90387–064J1	D – 5
	D – 10
90387–065T2	D – 5
90387–06605	D – 15
90387–06681	D – 10
90387–06761	B – 14
90387–0714B	B – 10
90387–07391	B – 15
90387–07674	D – 8
90387–077M3	F – 10
90387–085N0	B – 14
90387–0910H	F – 5
90387–104L8	E – 14
90387–106W6	B – 13
	B – 14
90387–120W5	B – 12
90387–127X0	D – 11
90387–130W6	B – 14
90387–173M5	E – 7

NUMERICAL INDEX

PART NO.	GRID NO.
90387–177K0	E – 7
90387–177R1	E – 5
90387–177Y4	E – 8
90387–177Y5	E – 8
90387–203M7	C – 14
90387–253M6	C – 14
90387–2802W	C – 14
90401–10106	B – 12
90401–10159	E – 11
	F – 2
90430–06014	B – 3
	B – 9
90430–08119	B – 2
90430–10171	D – 13
	D – 14
90430–10188	B – 12
	B – 13
90430–14131	B – 12
90445–086J6	D – 8
90445–090E5	B – 15
90445–106J2	E – 2
90445–11153	E – 2
90445–112E1	E – 2
90450–32015	B – 11
	B – 14
90450–38040	B – 10
	B – 14
90450–57034	B – 15
90450–75083	B – 15
90460–27270	B – 13
90461–06087	C – 4
90462–20223	C – 10
90464–10190	D – 8
	F – 13
90464–12238	C – 5
90464–13073	F – 13
90464–13077	F – 10
90464–15192	E – 2
	F – 5
	F – 13
90464–15195	F – 13
90464–20191	F – 5
	F – 13
90464–25217	F – 5
	F – 13
90465–08122	C – 9
90465–08127	C – 9
90465–08341	C – 8

PART NO.	GRID NO.
90465–08380	F – 6
90465–14310	F – 8
90465–15384	C – 9
90465–20035	B – 15
90465–20342	C – 10
90467–08017	B – 15
90467–08075	B – 15
	D – 8
90467–09006	E – 2
90467–09037	C – 4
90467–10041	E – 3
90467–11090	B – 11
90467–11106	E – 3
90467–12053	E – 2
90467–14057	E – 15
90467–15012	C – 5
90467–22080	C – 2
90467–24113	C – 2
90480–01558	F – 5
90480–01603	D – 9
90480–10258	D – 5
90480–10517	F – 9
90480–12550	D – 6
90480–13163	E – 2
90480–13369	D – 8
90480–13426	F – 3
90480–14229	F – 3
90480–14585	F – 8
90480–14604	B – 15
90480–15363	B – 10
90480–16233	D – 8
90480–16404	D – 8
90480–18276	F – 10
90501–06022	D – 2
90501–104F9	B – 13
90501–12743	E – 13
90501–237L0	C – 12
90506–18224	E – 13
90506–20192	E – 15
90506–26225	E – 13
90508–167A3	C – 12
90508–297A4	D – 2
90508–32682	D – 3
90560–07007	D – 8
90560–17233	E – 5
91314–06020	B – 13
	B – 14
91314–06025	B – 8

PART NO.	GRID NO.
91314–06025	B – 14
91314–08016	C – 7
91314–08030	D – 12
91314–10025	D – 4
91314–10045	D – 4
91314–10060	D – 4
91317–05010	E – 2
91317–05016	F – 6
	F – 12
91317–06010	F – 13
91317–06014	F – 13
91317–06016	B – 11
91317–06018	C – 11
91317–06020	B – 15
91317–06025	D – 8
91317–06150	B – 2
91317–08040	D – 14
91317–08110	C – 6
91317–10025	D – 13
	D – 14
91317–10030	D – 14
91401–20012	E – 15
92014–06010	F – 12
92014–08020	E – 15
92017–06012	D – 6
92017–06035	D – 15
92906–04600	E – 11
92907–04100	C – 3
92907–04600	B – 2
	B – 11
92907–05600	B – 10
	B – 15
92907–06100	E – 15
92907–06600	D – 10
	F – 6
	F – 12
92907–08200	E – 7
92907–08600	C – 12
92990–05600	B – 10
92990–06600	C – 6
93101–12004	D – 3
93102–12224	C – 12
93102–25044	E – 7
93102–28022	E – 5
93102–35459	C – 14
93105–42024	E – 7
93109–12075	C – 9
93109–18020	D – 11

PART NO.	GRID NO.
93210–07135	B – 14
93210–10096	B – 13
	B – 14
93210–12095	C – 7
93210–12790	B – 13
	B – 14
93210–13657	B – 13
	B – 14
93210–14369	C – 10
93210–15566	B – 14
93210–16629	B – 14
93210–18N01	D – 13
	D – 14
93210–18417	B – 11
93210–21190	B – 9
93210–26741	B – 14
93210–27370	B – 14
93210–29196	F – 13
93210–30660	B – 5
93210–32172	C – 10
93210–33133	B – 9
	C – 15
93210–34504	D – 13
	D – 14
93210–357A2	B – 9
93210–44545	B – 15
93210–49046	B – 11
93210–64297	B – 12
93210–90785	B – 3
93306–20314	E – 7
93306–20455	C – 15
93306–20464	C – 14
93306–30319	E – 5
93306–30320	E – 7
93306–30525	C – 14
93306–37207	E – 7
93310–365B8	C – 13
93315–11206	C – 12
93317–11020	C – 12
93317–21236	C – 9
93320–32403	D – 10
93340–21505	C – 12
93399–99931	D – 12
93399–99932	D – 12
93440–10109	B – 2
93440–25084	C – 14
93440–31172	C – 14
93440–45144	C – 15

PART NO.	GRID NO.
93450–22027	B – 4
93501–04011	E – 13
93505–08030	B – 13
9384E–16191	C – 14
93900–00030	E – 5
	E – 7
94111–1810C	E – 5
94115–1710D	E – 7
94581–46114	E – 7
94591–40138	B – 8
94701–00241	B – 2
94701–00242	B – 2
95024–06010	D – 4
95024–06012	B – 9
95024–06020	B – 9
	B – 12
	C – 8
95024–06025	B – 13
	C – 9
	E – 11
95024–06030	B – 9
	B – 12
	C – 9
95024–06035	C – 10
95024–06040	B – 12
95024–06045	B – 9
	C – 10
	E – 14
95024–06055	C – 9
	C – 10
95024–06060	B – 9
95024–06110	C – 10
95024–08012	B – 2
95024–10040	B – 13
95026–06030	E – 11
95027–06010	D – 5
95027–06012	E – 10
95027–06014	B – 11
	F – 10
95027–06016	B – 9
	B – 14
95027–06020	B – 11
	B – 12
	D – 5
	F – 11
95027–06025	B – 11
	B – 12
	C – 9

PART NO.	GRID NO.
95027–06035	B – 13
	C – 10
95027–08025	C – 6
95301–06600	E – 11
95304–06700	D – 3
95307–06600	F – 8
	F – 10
95307–08600	E – 7
95307–08700	E – 15
95307–12600	F – 7
95307–12700	F – 7
95604–06200	E – 14
95604–16200	E – 8
95606–06100	E – 11
95607–04100	D – 7
95607–06100	F – 10
	F – 11
95607–06200	E – 2
95607–10200	E – 7
95607–12100	D – 11
95617–10100	D – 11
95707–05500	E – 4
	F – 10
95707–10500	C – 6
95807–06010	D – 4
	F – 13
95807–06012	F – 5
95807–06016	E – 2
95807–06020	F – 12
95807–06025	B – 10
95814–06040	C – 7
	C – 8
95814–08050	C – 7
95814–08060	C – 7
95817–06020	C – 7
95817–06025	C – 8
95817–06030	C – 7
95817–06045	C – 8
95817–06050	C – 11
95817–06055	C – 7
95817–06070	C – 7
	C – 8
95817–06090	C – 10
95817–08035	F – 3
95817–08065	C – 7
95817–08070	C – 7
95817–08075	C – 8
95817–08080	F – 3

PART NO.	GRID NO.
95827–06010	E – 15
95827–06012	C – 15
95827–06020	D – 3
95827–08040	D – 6
95827–10030	E – 9
97007–05012	B – 10
97007–06025	C – 2
	D – 10
97007–08030	D – 15
97706–40620	F – 7
	F – 10
97707–40010	F – 3
97707–40018	F – 8
97707–40620	F – 7
97707–50012	D – 6
	F – 4
97707–50125	B – 15
98506–04014	E – 11
98507–03008	D – 15
98507–04006	B – 2
98507–04008	B – 11
	C – 3
98507–04014	C – 3
98507–04018	C – 3
98507–05008	B – 10
98507–05010	B – 10
	C – 3
	C – 9
	E – 2
98507–05012	C – 4
98507–05016	B – 15
98507–05022	F – 11
98507–05025	F – 11
98507–05035	E – 10
98507–05045	F – 11
98507–06008	F – 12
	F – 13
98507–06010	B – 12
98507–06016	F – 12
	F – 13
98507–06035	B – 12
	F – 6
98507–06045	B – 12
98706–04012	E – 11
98707–03020	F – 11
98907–05010	D – 6
98907–06012	F – 12
99001–07600	C – 12

PART NO.	GRID NO.
99001–10600	D – 3
99009–10400	C – 12
99009–11400	B – 12
99009–12400	B – 9
99009–19400	D – 3
99224–00140	D – 15
99226–00140	D – 15
99227–00140	D – 15
99244–00080	D – 6
99246–00080	D – 6
99247–00080	D – 6
	F – 3
99510–08016	B – 2
99530–08012	B – 12
	C – 8
	C – 9
	C – 10
99530–08016	B – 13
	C – 8
99530–10114	C – 7
	C – 10
99530–14016	B – 3
	C – 7

PART NO.	GRID NO.

PART NO.	GRID NO.

PART NO.	GRID NO.

PART NO.	GRID NO.

CONTENTS

ENGINE

CYLINDER HEAD B2
CYLINDER B3
CRANKSHAFT. PISTON B4
VALVE B6
CAMSHAFT. CHAIN B8
WATER PUMP B9
RADIATOR. HOSE B10
OIL PUMP B12
INTAKE B15
CARBURETOR C3
EXHAUST C6
CRANKCASE C7
CRANKCASE COVER 1 ..... C9
STARTER CLUTCH C11
CLUTCH C12
TRANSMISSION C14
SHIFT CAM. FORK D2
SHIFT SHAFT D3

CHASSIS

FRAME D4
FENDER D5
SIDE COVER D8
REAR ARM D10
REAR SUSPENSION D11
STEERING D12
FRONT FORK D13
FUEL TANK D15
SEAT E4
FRONT WHEEL E5
FRONT BRAKE CALIPER E6
REAR WHEEL E7
REAR BRAKE CALIPER E9
STEERING HANDLE. CABLE E10
FRONT MASTER CYLINDER E11
STAND. FOOTREST E13
REAR MASTER CYLINDER E15
COWLING 1 ..... F3
GENERATOR F6
FLASHER LIGHT F7
METER F8
HEADLIGHT F9
TAILLIGHT F10
HANDLE SWITCH. LEVER F11
ELECTRICAL 1 ..... F12
ELECTRICAL 2 ..... F13

INDEX

NUMERICAL INDEX M1